# HOW TO READ THE STANDARD OF HSK-T TOOLS

## ●How this section page is organized

①Organized by application. (Refer to the index on the next page.)

**PRODUCT TYPE**
indicates the first four letters of the order number, as well as cutting applications.

**TITLE OF PRODUCT SERIES**

**PRODUCT SECTION**

**FIGURE SHOWING THE TOOLING APPLICATION**
uses illustrations and arrows to depict available machining applications along with cutting edge lead angles.

**GEOMETRY**

**CHIP BREAKER BY CUTTING APPLICATION**

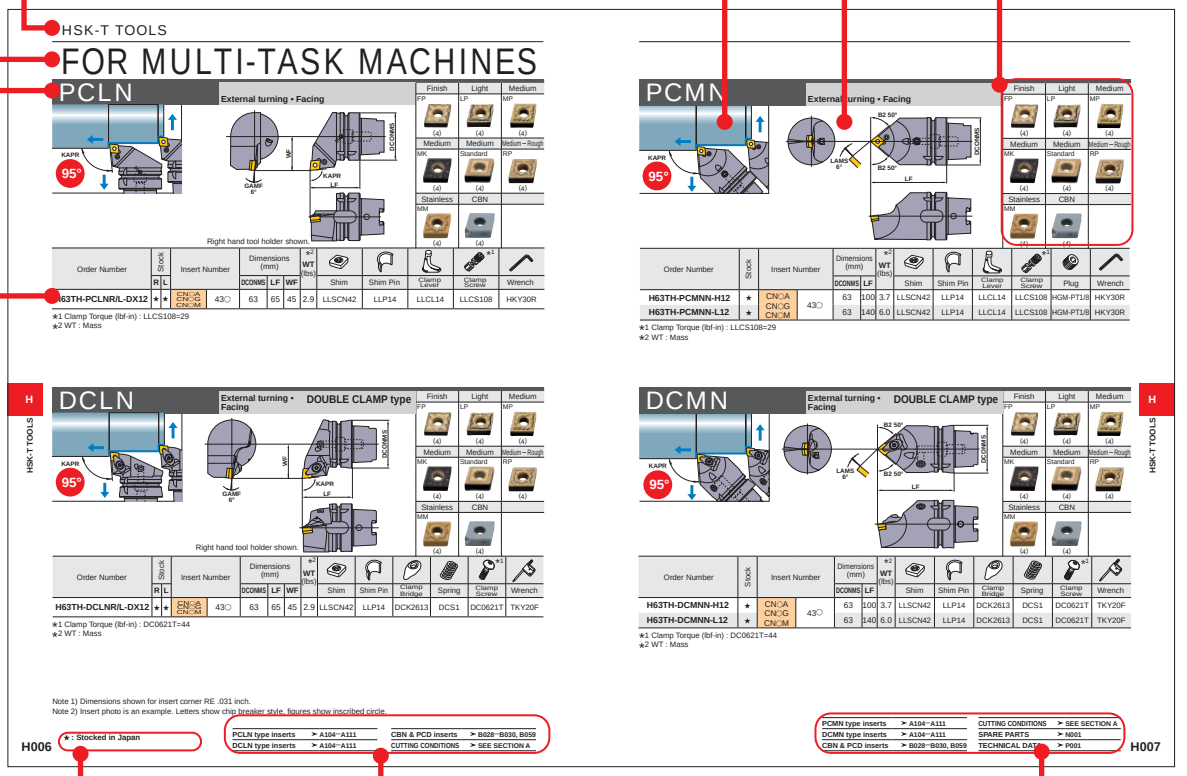


**LEGEND FOR STOCK STATUS MARK**
is shown on the left hand page of each double-page spread.

**REFERENCE PAGE FOR APPLICABLE INSERTS**
indicates reference pages for details of inserts that are applicable to the title product.

**PAGE REFERENCE**
**·SPARE PARTS**
**·TECHNICAL DATA**
indicates reference pages, including the above, on the right hand page of each double-page spread.

**PRODUCT STANDARDS**
Indicates order numbers, stock status (per right/left hand), applicable inserts, dimensions, and spare parts.

**●To Order : Please specify order number and hand of tool (right/left).**

# HSK-T TOOLS


OVERVIEW OF HSK-T TOOLS ····· H002
CLASSIFICATION OF HSK-T TOOLS ····· H004
HSK-T TOOL STANDARDS
EXTERNAL TURNING • FACING
CN○○ INSERTS TOOL HOLDERS ····· H006
DN○○ INSERTS TOOL HOLDERS ····· H011
EXTERNAL TURNING • FACING • BORING
CN○○ INSERTS TOOL HOLDERS ····· H008
EXTERNAL TURNING • COPYING
DN○○ INSERTS TOOL HOLDERS ····· H009
EXTERNAL TURNING • FACING • COPYING
RC○○ INSERTS TOOL HOLDERS ····· H012
FACING • COPYING
VB○○ INSERTS TOOL HOLDERS ····· H013
GROOVING
MG INSERTS TOOL HOLDERS ····· H014
THREADING
MMT INSERTS TOOL HOLDERS ····· H016
MT INSERTS TOOL HOLDERS ····· H017

EXTERNAL TURNING TOOL HOLDERS ··· H019
BORING BAR HOLDERS ····· H021
BORING BAR SLEEVES ····· H022


*Arranged by Alphabetical order


H022 **H100TH-B○○-○○○**
H020 **H100TH-EN3232R/L-130**
H019 **H100TH-EV3232R/L-180**
H008 **H63TH-A○○○DCLNR/L12**
H021 **H63TH-B○○-○○**
H008 **H63TH-DCLNL-L12-3**
H006 **H63TH-DCLNR/L-DX12**
H007 **H63TH-DCMNN-H/L12**
H011 **H63TH-DDJNL-L15-3**
H009 **H63TH-DDJNR/L-DX15**
H010 **H63TH-DDNNN-H/L15**
H020 **H63TH-EN2525R/L-115**
H021 **H63TH-EV2020R/L-105-3**
H019 **H63TH-EV2525R/L-112**
H014 **H63TH-MGHR/L-DX43○○**
H016 **H63TH-MMTENR-H/L16**
H016 **H63TH-MMTER-DX16**
H017 **H63TH-MTHR/L-DX43**
H006 **H63TH-PCLNR/L-DX12**
H007 **H63TH-PCMNN-H/L12**
H009 **H63TH-PDJNR/L-DX15**
H010 **H63TH-PDNNN-H/L15**
H012 **H63TH-PRDCN-H/L12**
H012 **H63TH-PRGCR/L-DX12**
H013 **H63TH-SVPBR/L-DX16**
H013 **H63TH-SVVBN-H/L16**
H022 **SL32○○-90**

Tooling system
for turning on
multi-task machines

# HSK-T TOOLS

## HSK-T System

HSK-T is a new HSK system designed for turning on multi-task machines that are compatible with HSK-A type (ISO standard: ISO12164-1:2001).
The HSK system was developed by a consortium of 17 Japanese manufacturers and registered in ISO standard (ISO12164-3:2008) under the name HSK-T type in 2008 and JIS standard (JIS B6064-3) in 2013.

## High accuracy cutting edge positioning

The HSK-T type has a closer tolerance between the spindle key and tool holder keyway than the HSK-A type. This results in higher cutting edge positional accuracies. For milling, the conventional HSK-A type tools can be still used.

## Compatible with both multi-task machines and machining centers

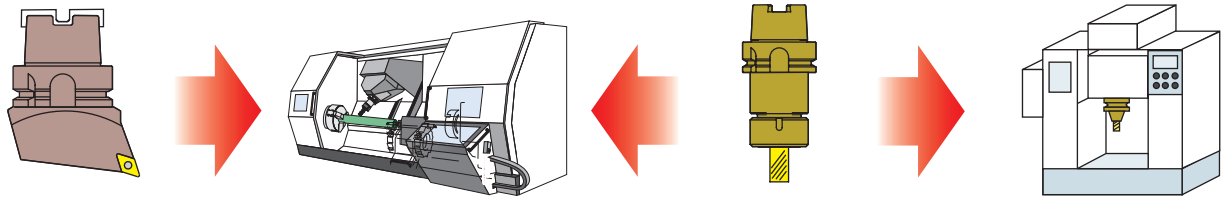

HSK-T
Turning tool holder

HSK-T spindle
Multi-task machines

HSK-A
Rotating tool holder

HSK-A spindle
Machining center

*Note
Short neck length from the flange with thick body of the HSK-T turning tool as shown in the figure at the left.
Because there are machines which cannot be mounted depending on the ATC specifications of the multi-task machine(HSK-A type), please check beforehand.
Also be careful of interference of the magazine with adjacent tools.

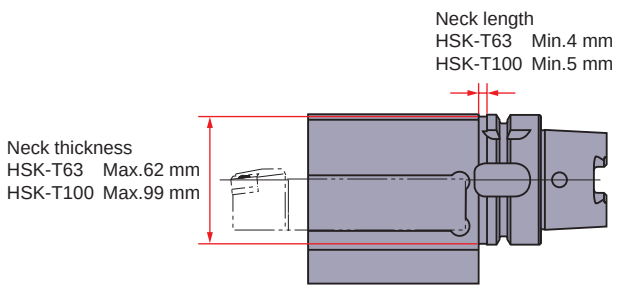


**HSK-T turning tool standard (Example)**

## Improved keyway tolerance

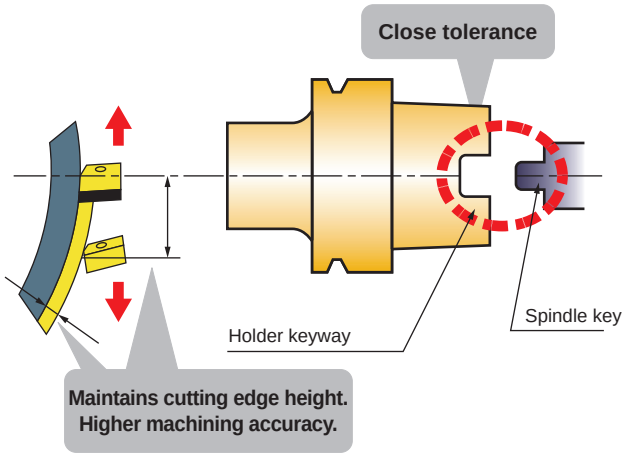


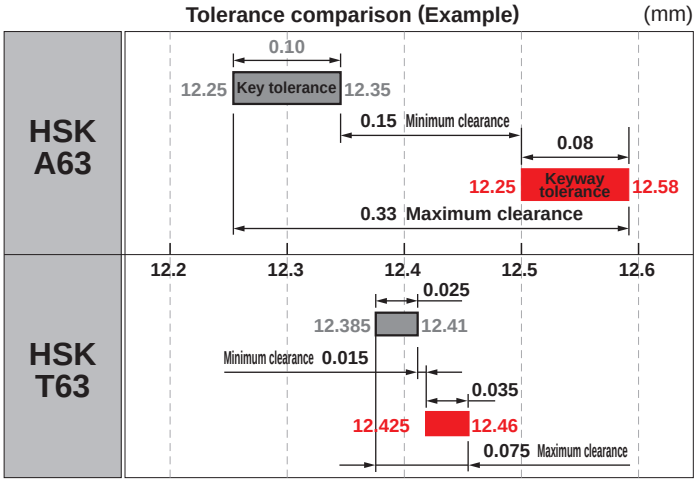

# High accuracy and rigidity HSK-T type tooling system developed for use on multi-task machines.

## Straight type tools suitable for use on multi-task machines

### Avoid workpiece interference with improved tool accessibility.

By tilting the machines B spindle (main axis of the tool) at 45 deg, interference between the spindle, holder, workpiece and chuck can be avoided.

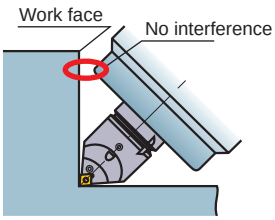


### Improve centerling height by positioning the cutting edge at the center of the spindle.

Increased stability and accuracy can be achieved because the cutting edge centerling height is not affected by the gap between the spindle and the key.

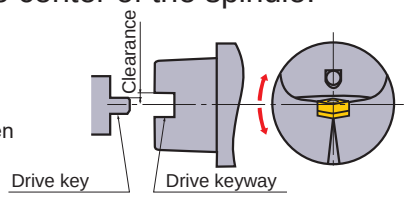


## New single-action double clamp series

The double clamp mechanism offers high rigidity, accuracy and reliability that ensures secure insert clamping. Therefore making it suitable turning of difficult to machine materials such as stainless and heat resistant alloys.

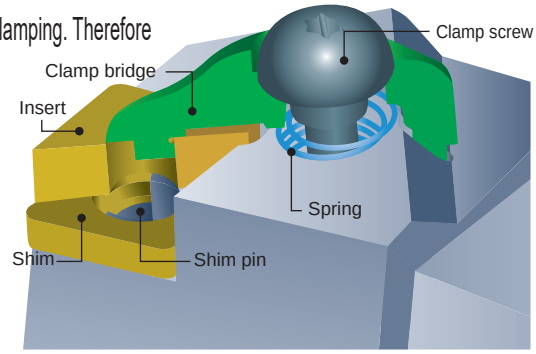

Handed type for turning and facing

Straight type for turning and facing

For turning, facing and boring

## 3 on 1 tool for process and tool consolidation

3 turning inserts of the same geometry can be installed on a single tool.

The same type of inserts can be installed for quick change with spare tools.

Different types of inserts can be installed for different applications (roughing, semi finishing and finishing)

Inserts in different grade types can be installed to cover various kinds of workpieces.

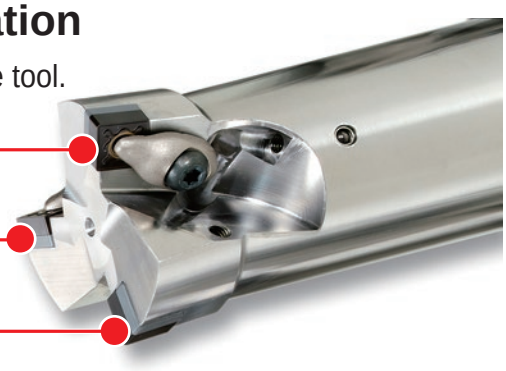

## New HSK-T100 size for large workpieces

Larger tool holder sizes for high efficiency machining.

Square shank holder type

Boring bar / Drill type

Sleeve

**A single tool can be used with different sized tool holders.**

- Available for use with JIS B4126 (ISO 5610) 32x32 and 32x25 tools.
- Possible to fit a 25x25 tool by using a 7 mm plate.
  Possible to fit a 1"x1" tool by using a 6.6 mm plate.

*Please prepare a plate on your own.

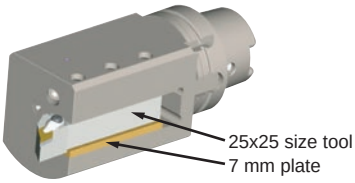

# CLASSIFICATION OF HSK-T TOOLS

## EXTERNAL TURNING • FACING • COPYING

| Order Number | Cutting Mode |
|---|---|
| H63TH-PCLNR/L-DX12 H006 | 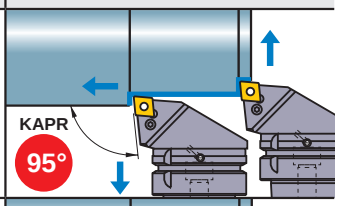  |
| H63TH-DCLNR/L-DX12 H006 | 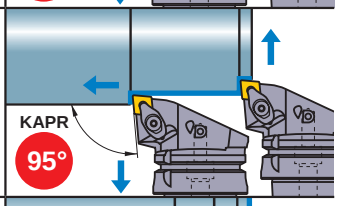  |
| H63TH-PDJNR/L-DX15 H009 | 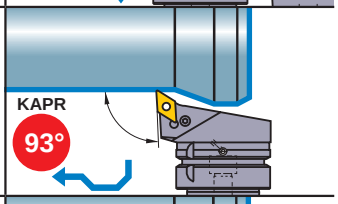  |
| H63TH-DDJNR/L-DX15 H009 | 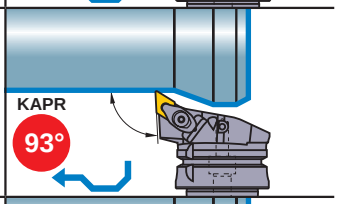  |
| H63TH-SVPBR/L-DX16 H013 | 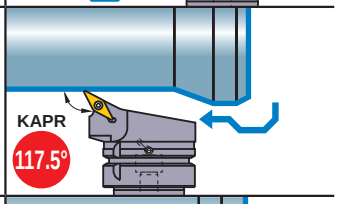  |
| H63TH-PRGCR/L-DX12 H012 | 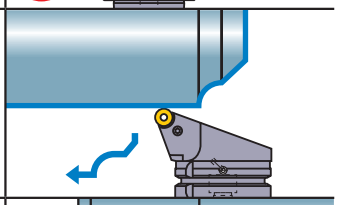 |
| H63TH-DCLNL-L12-3 H008 | 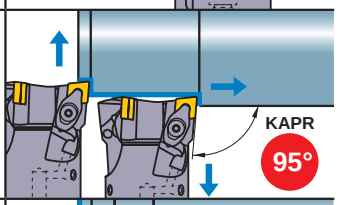  |
| H63TH-DDJNL-L15-3 H011 | 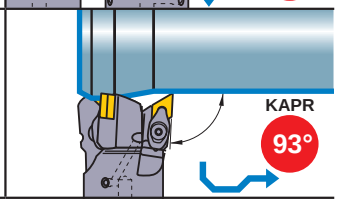  |

| Order Number | Cutting Mode |
|---|---|
| H63TH-PCMNN-H/L12 H007 | 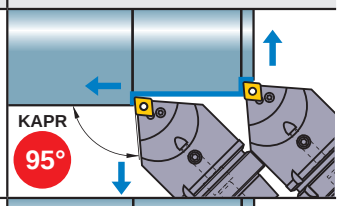  |
| H63TH-DCMNN-H/L12 H007 | 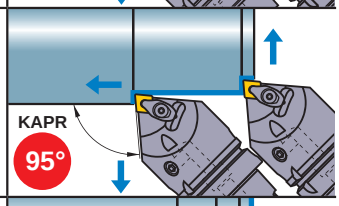  |
| H63TH-PDNNN-H/L15 H010 | 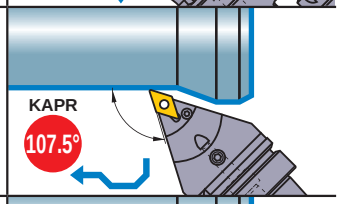  |
| H63TH-DDNNN-H/L15 H010 | 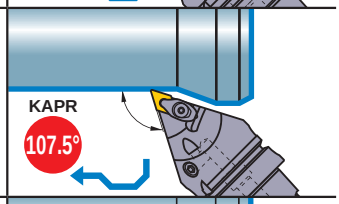  |
| H63TH-SVVBN-H/L16 H013 | 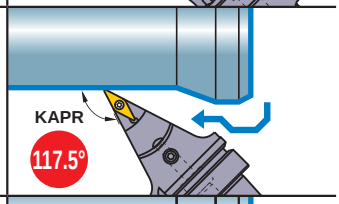  |
| H63TH-PRDCN-H/L12 H012 | 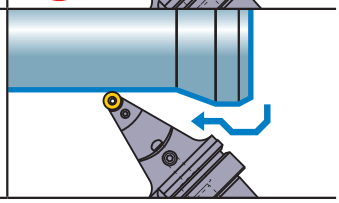 |

## EXTERNAL TURNING • FACING • BORING

| Order Number | Cutting Mode |
|---|---|
| H63TH-A25KDCLNR/L12<br>H63TH-A32LDCLNR/L12 H008 | 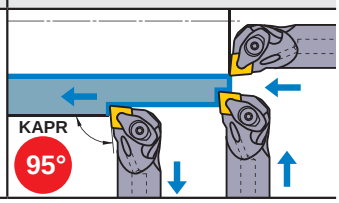  |

## GROOVING

| Order Number | Cutting Mode |
|---|---|
| **H63TH-MGHR/L-DX43○○** ➲H014 | 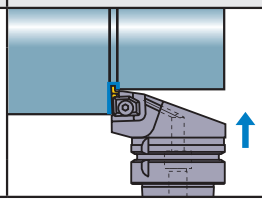 |

## EXTERNAL TURNING TOOL HOLDERS

| Order Number | Holder |
|---|---|
| **H63TH-EV2525R/L-112** ➲H019 | |
| **H100TH-EV3232R/L-180** ➲H019 | |
| **H63TH-EN2525R/L-115** ⋆1 ➲H020 | |
| **H100TH-EN3232R/L-130** ⋆1 ➲H020 | |
| **H63TH-EV2020R/L-105-3** ➲H021 | |

## THREADING

| Order Number | Cutting Mode |
|---|---|
| **H63TH-MMTER-DX16** ➲H016 | 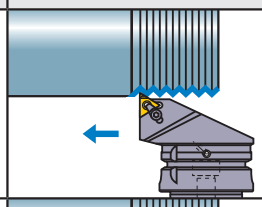 |
| **H63TH-MMTENR-H/L16** ➲H016 | 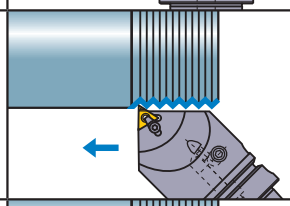 |
| **H63TH-MTHR/L-DX43** ➲H017 | 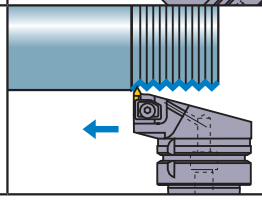 |

## BORING BAR HOLDERS

| Order Number | Holder |
|---|---|
| **H63TH-B○○-○○** ➲H021 | |
| **H100TH-B○○-○○○** ➲H022 | |
| **SL32○○-90** (Sleeve) ⋆2 ➲H022 | |

⋆1 Mitsubishi Materials is licensed for production and distribution of these tools from MORI SEIKI Co., LTD. under Japan Patent No.3720202.
⋆2 The SL32○○-90 sleeve is only for use with H100TH-B32-135.
Note 1) The HSK63A shank type has a built-in coolant pipe for installation.

# FOR MULTI-TASK MACHINES

## PCLN

**External turning • Facing**

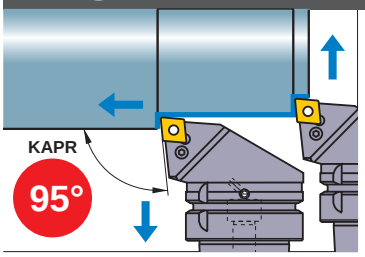


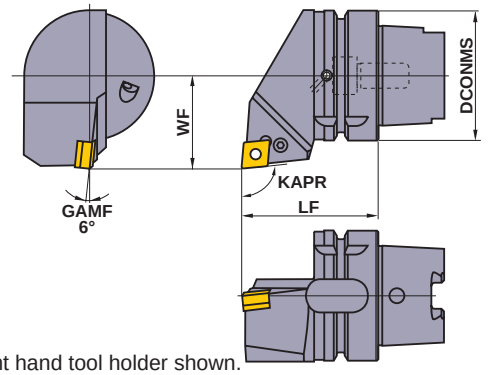


Right hand tool holder shown.

| Finish | Light | Medium |
|---|---|---|
| FP (4) | LP (4) | MP (4) |
| **Medium** | **Medium** | **Medium – Rough** |
| MK (4) | Standard (4) | RP (4) |
| **Stainless** | **CBN** | |
| MM (4) | (4) | |

| Order Number | Stock R | Stock L | Insert Number | | Dimensions (mm) DCONMS | LF | WF | ★2 WT (lbs) | Shim | Shim Pin | Clamp Lever | Clamp Screw ★1 | Wrench |
|---|---|---|---|---|---|---|---|---|---|---|---|---|---|
| **H63TH-PCLNR/L-DX12** | ★ | ★ | CNOA CNOG CNOM | 43○ | 63 | 65 | 45 | 2.9 | LLSCN42 | LLP14 | LLCL14 | LLCS108 | HKY30R |

★1 Clamp Torque (lbf-in) : LLCS108=29
★2 WT : Mass

## DCLN

**External turning • Facing** **DOUBLE CLAMP type**

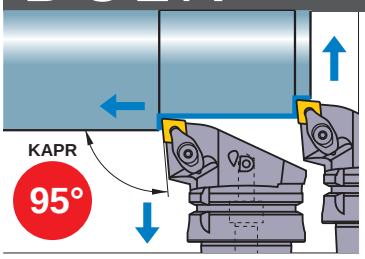


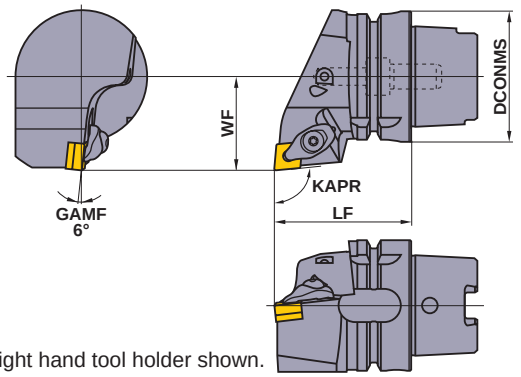


Right hand tool holder shown.

| Finish | Light | Medium |
|---|---|---|
| FP (4) | LP (4) | MP (4) |
| **Medium** | **Medium** | **Medium – Rough** |
| MK (4) | Standard (4) | RP (4) |
| **Stainless** | **CBN** | |
| MM (4) | (4) | |

| Order Number | Stock R | Stock L | Insert Number | | Dimensions (mm) DCONMS | LF | WF | ★2 WT (lbs) | Shim | Shim Pin | Clamp Bridge | Spring | Clamp Screw ★1 | Wrench |
|---|---|---|---|---|---|---|---|---|---|---|---|---|---|---|
| **H63TH-DCLNR/L-DX12** | ★ | ★ | CNOA CNOG CNOM | 43○ | 63 | 65 | 45 | 2.9 | LLSCN42 | LLP14 | DCK2613 | DCS1 | DC0621T | TKY20F |

★1 Clamp Torque (lbf-in) : DC0621T=44
★2 WT : Mass

Note 1) Dimensions shown for insert corner RE .031 inch.
Note 2) Insert photo is an example. Letters show chip breaker style, figures show inscribed circle.

★ : Stocked in Japan


| | |
|---|---|
| PCLN type inserts | ➤ A104–A111 |
| DCLN type inserts | ➤ A104–A111 |
| CBN & PCD inserts | ➤ B028–B030, B059 |
| CUTTING CONDITIONS | ➤ SEE SECTION A |

# PCMN

**External turning • Facing**

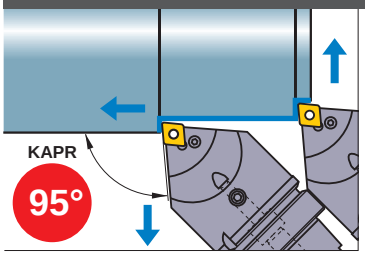


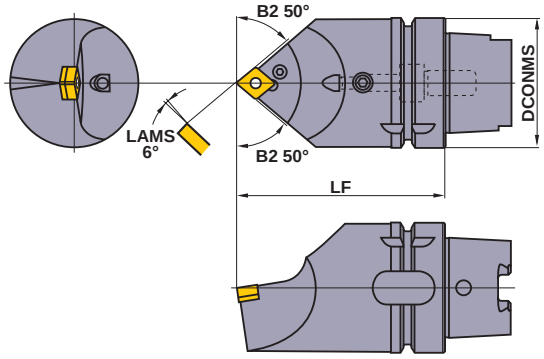


| Finish | Light | Medium |
|---|---|---|
| FP | LP | MP |
| | | |
| (4) | (4) | (4) |
| **Medium** | **Medium** | **Medium – Rough** |
| MK | Standard | RP |
| | | |
| (4) | (4) | (4) |
| **Stainless** | **CBN** | |
| MM | | |
| | | |
| (4) | (4) | |

| Order Number | Stock | Insert Number | | Dimensions (mm) DCONMS | Dimensions (mm) LF | *2 WT (lbs) | Shim | Shim Pin | Clamp Lever | *1 Clamp Screw | Plug | Wrench |
|---|---|---|---|---|---|---|---|---|---|---|---|---|
| **H63TH-PCMNN-H12** | ★ | CN○A<br>CN○G<br>CN○M | 43○ | 63 | 100 | 3.7 | LLSCN42 | LLP14 | LLCL14 | LLCS108 | HGM-PT1/8 | HKY30R |
| **H63TH-PCMNN-L12** | ★ | | | 63 | 140 | 6.0 | LLSCN42 | LLP14 | LLCL14 | LLCS108 | HGM-PT1/8 | HKY30R |

*1 Clamp Torque (lbf-in) : LLCS108=29
*2 WT : Mass

# DCMN

**External turning • Facing** **DOUBLE CLAMP type**

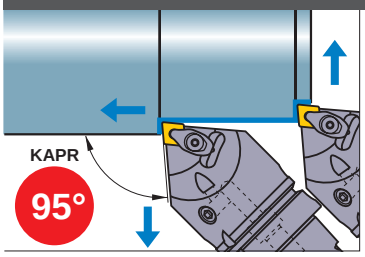


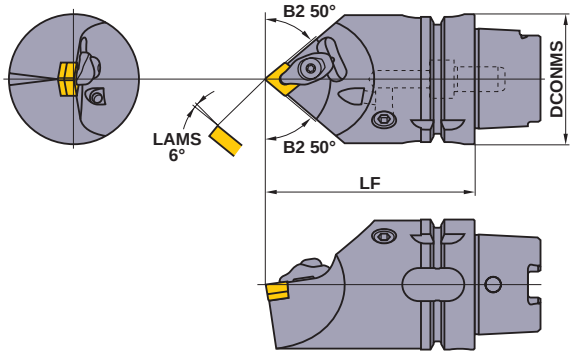


| Finish | Light | Medium |
|---|---|---|
| FP | LP | MP |
| | | |
| (4) | (4) | (4) |
| **Medium** | **Medium** | **Medium – Rough** |
| MK | Standard | RP |
| | | |
| (4) | (4) | (4) |
| **Stainless** | **CBN** | |
| MM | | |
| | | |
| (4) | (4) | |

| Order Number | Stock | Insert Number | | Dimensions (mm) DCONMS | Dimensions (mm) LF | *2 WT (lbs) | Shim | Shim Pin | Clamp Bridge | Spring | *1 Clamp Screw | Wrench |
|---|---|---|---|---|---|---|---|---|---|---|---|---|
| **H63TH-DCMNN-H12** | ★ | CN○A<br>CN○G<br>CN○M | 43○ | 63 | 100 | 3.7 | LLSCN42 | LLP14 | DCK2613 | DCS1 | DC0621T | TKY20F |
| **H63TH-DCMNN-L12** | ★ | | | 63 | 140 | 6.0 | LLSCN42 | LLP14 | DCK2613 | DCS1 | DC0621T | TKY20F |

*1 Clamp Torque (lbf-in) : DC0621T=44
*2 WT : Mass



| | | | |
|---|---|---|---|
| PCMN type inserts | ➤ A104–A111 | CUTTING CONDITIONS | ➤ SEE SECTION A |
| DCMN type inserts | ➤ A104–A111 | SPARE PARTS | ➤ N001 |
| CBN & PCD inserts | ➤ B028–B030, B059 | TECHNICAL DATA | ➤ P001 |

# FOR MULTI-TASK MACHINES

## DCLN

**External turning • Facing** **DOUBLE CLAMP type**

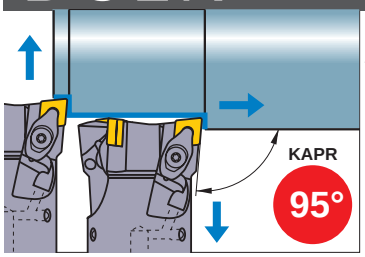


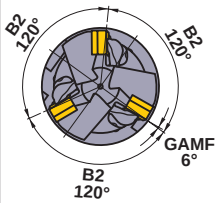


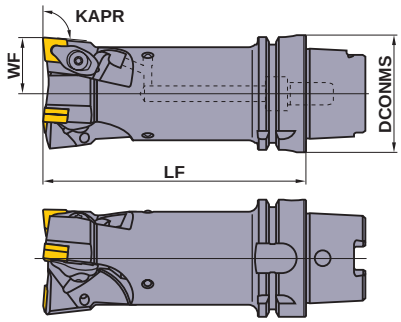


Left hand tool holder only.

| Finish | Light | Medium |
|---|---|---|
| FP (4) | LP (4) | MP (4) |
| **Medium** | **Medium** | **Medium – Rough** |
| MK (4) | Standard (4) | RP (4) |
| **Stainless** | **CBN** | |
| MM (4) | (4) | |

| Order Number | Stock L | Insert Number | | Dimensions (mm) DCONMS | LF | WF | ★2 WT (lbs) | Shim | Shim Pin | Clamp Bridge | Spring | ★1 Clamp Screw | Wrench |
|---|---|---|---|---|---|---|---|---|---|---|---|---|---|
| **H63TH-DCLNL-L12-3** | ★ | CN○A CN○G CN○M | 43○ | 63 | 140 | 30 | 4.9 | LLSCN42 | LLP14 | DCK2613 | DCS1 | DC0621T | TKY20F |

★1 Clamp Torque (lbf-in) : DC0621T=44
★2 WT : Mass

H

HSK-T TOOLS

## DCLN

**External turning • Facing • Boring** **DOUBLE CLAMP type**

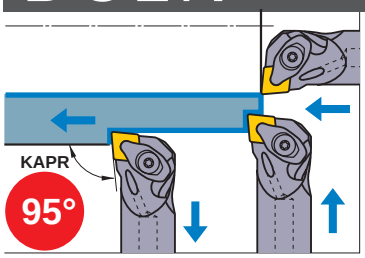


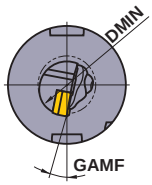


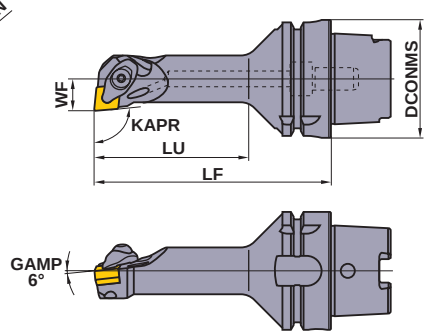


Right hand tool holder shown.

| Finish | Light | Medium |
|---|---|---|
| FP (4) | LP (4) | MP (4) |
| **Medium** | **Medium** | **Medium – Rough** |
| MK (4) | Standard (4) | RP (4) |
| **Stainless** | **CBN** | |
| MM (4) | (4) | |

| Order Number | Stock R | Stock L | Insert Number | | Dimensions (mm) DCONMS | LF | LU | WF | GAMF | DMIN (mm) | ★2 WT (lbs) | Shim | Shim Pin | Clamp Bridge | Spring | ★1 Clamp Screw | Wrench |
|---|---|---|---|---|---|---|---|---|---|---|---|---|---|---|---|---|---|
| **H63TH-A25KDCLNR/L12** | ★ | ★ | CN○A CN○G CN○M | 43○ | 63 | 125 | 82 | 17 | 11° | 32 | 2.4 | LLSCP42 | LLP14 | DCK2613 | DCS1 | DC0621T | TKY20F |
| **H63TH-A32LDCLNR/L12** | ★ | ★ | | | 63 | 140 | 100 | 22 | 13° | 40 | 3.9 | LLSCN42 | LLP14 | DCK2613 | DCS1 | DC0621T | TKY20F |

★1 Clamp Torque (lbf-in) : DC0621T=44
★2 WT : Mass

Note 1) Dimensions shown for insert corner RE .031 inch.
Note 2) Insert photo is an example. Letters show chip breaker style, figures show inscribed circle.

**★ : Stocked in Japan**


| | |
|---|---|
| **DCLN type inserts** | **➤ A104–A111** |
| **CBN & PCD inserts** | **➤ B028–B030, B059** |
| **CUTTING CONDITIONS** | **➤ SEE SECTION A** |

# PDJN

## External turning • Copying

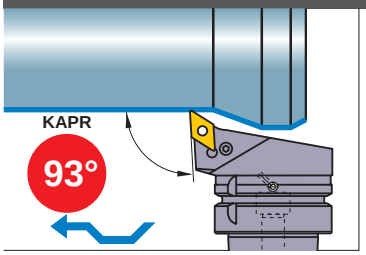


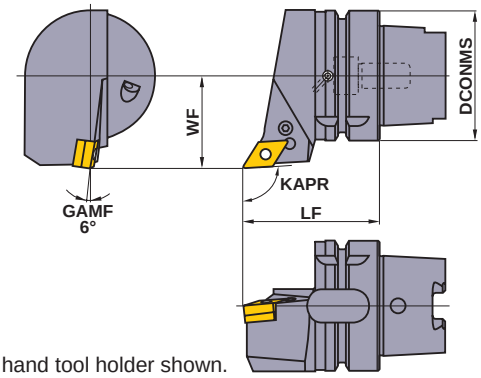


Right hand tool holder shown.

| Finish | Light | Medium |
|---|---|---|
| FP | LP | MP |
| | | |
| (4) | (4) | (4) |
| **Medium** | **Medium – Rough** | **Stainless** |
| MK | RP | MM |
| 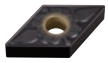 | 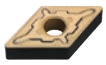 | |
| (4) | (4) | (4) |
| **G Class** | **CBN** | |
| R/L | | |
| | 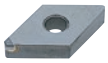 | |
| (4) | (4) | |

| Order Number | Stock R | Stock L | Insert Number | | Dimensions (mm) DCONMS | LF | WF | ⋆3 WT (lbs) | ⋆2 Shim | Shim Pin | Clamp Lever | ⋆1 Clamp Screw | Wrench |
|---|---|---|---|---|---|---|---|---|---|---|---|---|---|
| **H63TH-PDJNR/L-DX15** | ★ | ★ | DN○A<br>DN○G<br>DN○M<br>DNMX | 43○ | 63 | 65 | 45 | 2.6 | LLSDN43<br>(LLSDN42) | LLP14 | LLCL24 | LLCS108 | HKY30R |

⋆1 Clamp Torque (lbf-in) : LLCS108=29
⋆2 Please use shim no. LLSDN42 with .25 inch thick inserts. When using .25 inch thick inserts, the shim should be ordered separately.
⋆3 WT : Mass

# DDJN

## External turning • Copying DOUBLE CLAMP type

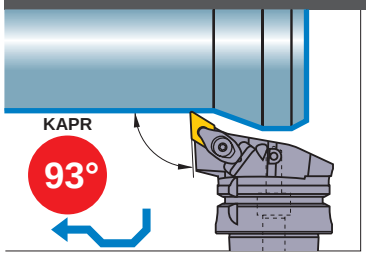


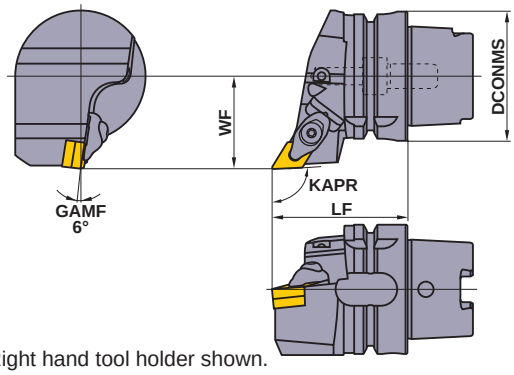


Right hand tool holder shown.

| Finish | Light | Medium |
|---|---|---|
| FP | LP | MP |
| | 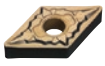 | |
| (4) | (4) | (4) |
| **Medium** | **Medium – Rough** | **Stainless** |
| MK | RP | MM |
| 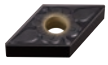 | 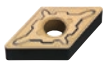 | |
| (4) | (4) | (4) |
| **G Class** | **CBN** | |
| R/L | | |
| 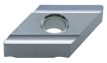 | | |
| (4) | (4) | |

| Order Number | Stock R | Stock L | Insert Number | | Dimensions (mm) DCONMS | LF | WF | ⋆3 WT (lbs) | ⋆2 Shim | Shim Pin | Clamp Bridge | Spring | ⋆1 Clamp Screw | Wrench |
|---|---|---|---|---|---|---|---|---|---|---|---|---|---|---|
| **H63TH-DDJNR/L-DX15** | ★ | ★ | DN○A<br>DN○G<br>DN○M<br>DNMX | 43○ | 63 | 65 | 45 | 2.6 | LLSDN43<br>(LLSDN42) | LLP24 | DCK2613 | DCS1 | DC0621T | TKY20F |

⋆1 Clamp Torque (lbf-in) : DC0621T=44
⋆2 Please use shim no. LLSDN42 with .25 inch thick inserts. When using .25 inch thick inserts, the shim should be ordered separately.
⋆3 WT : Mass



| | |
|---|---|
| PDJN type inserts | ➤ A112–A118 |
| DDJN type inserts | ➤ A112–A118 |
| CBN & PCD inserts | ➤ B031–B034, B059 |

| | |
|---|---|
| CUTTING CONDITIONS | ➤ SEE SECTION A |
| SPARE PARTS | ➤ N001 |
| TECHNICAL DATA | ➤ P001 |

# FOR MULTI-TASK MACHINES

## PDNN

**External turning • Copying**

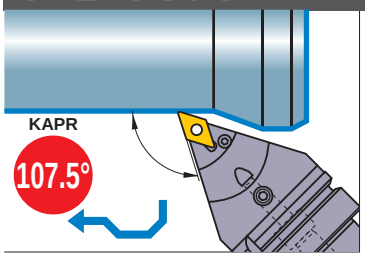


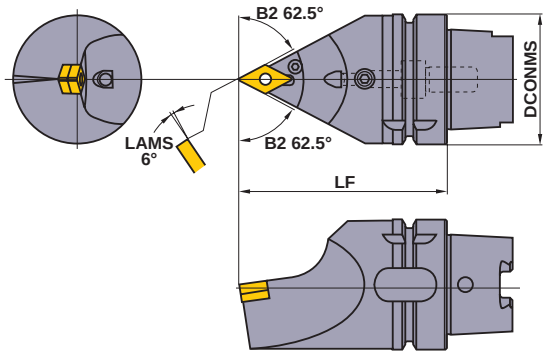


| Finish | Light | Medium |
|---|---|---|
| FP (4) | LP 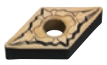 (4) | MP 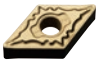 (4) |
| **Medium** | **Medium – Rough** | **Stainless** |
| MK 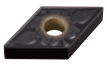 (4) | RP 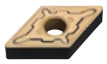 (4) | MM (4) |
| **G Class** | **CBN** | |
| R/L (4) | 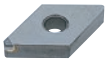 (4) | |

| Order Number | Stock | Insert Number | | Dimensions (mm) DCONMS | LF | ★3 WT (lbs) | ★2 Shim | Shim Pin | Clamp Lever | ★1 Clamp Screw | Plug | Wrench |
|---|---|---|---|---|---|---|---|---|---|---|---|---|
| **H63TH-PDNNN-H15** | ★ | DN○A DN○G DN○M DNMX | 43○ | 63 | 100 | 3.5 | LLSDN43 (LLSDN42) | LLP14 | LLCL24 | LLCS108 | HGM-PT1/8 | HKY30R |
| **H63TH-PDNNN-L15** | ★ | | | 63 | 140 | 5.5 | LLSDN43 (LLSDN42) | LLP14 | LLCL24 | LLCS108 | HGM-PT1/8 | HKY30R |

★1 Clamp Torque (lbf-in) : LLCS108=29
★2 Please use shim no. LLSDN42 with .25 inch thick inserts. When using .25 inch thick inserts, the shim should be ordered separately.
★3 WT : Mass

H

HSK-T TOOLS

## DDNN

**External turning • Copying** **DOUBLE CLAMP type**

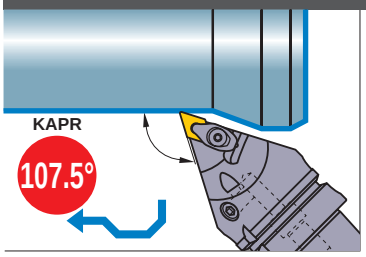


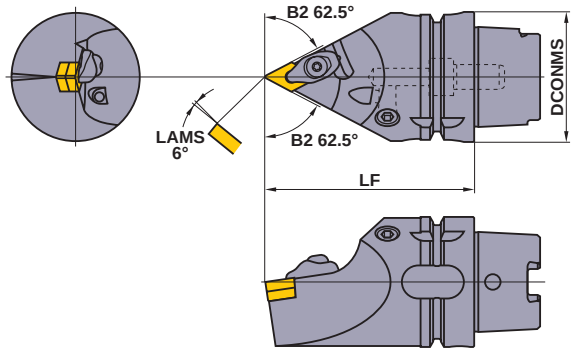


| Finish | Light | Medium |
|---|---|---|
| FP (4) | LP 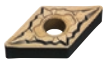 (4) | MP (4) |
| **Medium** | **Medium – Rough** | **Stainless** |
| MK 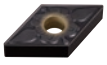 (4) | RP 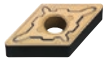 (4) | MM (4) |
| **G Class** | **CBN** | |
| R/L 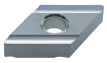 (4) | (4) | |

| Order Number | Stock | Insert Number | | Dimensions (mm) DCONMS | LF | ★3 WT (lbs) | ★2 Shim | Shim Pin | Clamp Bridge | Spring | ★1 Clamp Screw | Wrench |
|---|---|---|---|---|---|---|---|---|---|---|---|---|
| **H63TH-DDNNN-H15** | ★ | DN○A DN○G DN○M DNMX | 43○ | 63 | 100 | 3.5 | LLSDN43 (LLSDN42) | LLP24 | DCK2613 | DCS1 | DC0621T | TKY20F |
| **H63TH-DDNNN-L15** | ★ | | | 63 | 140 | 5.5 | LLSDN43 (LLSDN42) | LLP24 | DCK2613 | DCS1 | DC0621T | TKY20F |

★1 Clamp Torque (lbf-in) : DC0621T=44
★2 Please use shim no. LLSDN42 with .25 inch thick inserts. When using .25 inch thick inserts, the shim should be ordered separately.
★3 WT : Mass

Note 1) Dimensions shown for insert corner RE .031 inch.
Note 2) Insert photo is an example. Letters show chip breaker style, figures show inscribed circle.


| | |
|---|---|
| **PDNN type inserts** | ➤ **A112–A118** |
| **DDNN type inserts** | ➤ **A112–A118** |
| **CBN & PCD inserts** | ➤ **B031–B034, B059** |
| **CUTTING CONDITIONS** | ➤ **SEE SECTION A** |


**★ : Stocked in Japan**

# DDJN

**External turning • Facing**

**DOUBLE CLAMP type**

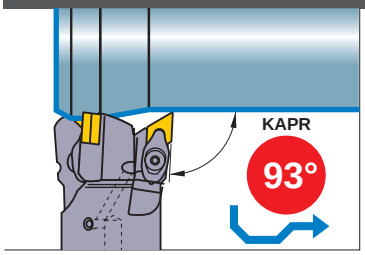


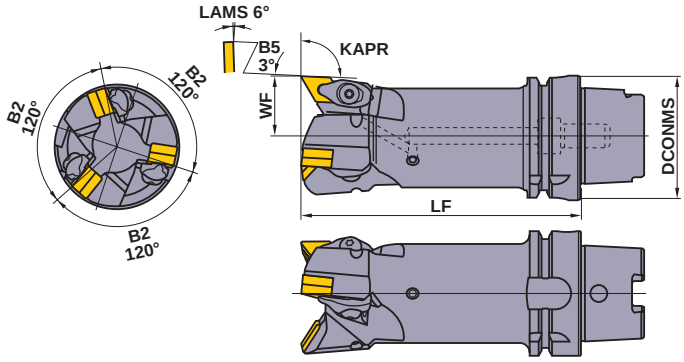


Left hand tool holder only.

| Finish | Light |
|---|---|
| FP (4) | LP 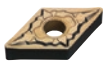 (4) |
| **Medium** | **Medium** |
| MP (4) | MK 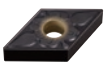 (4) |
| **Medium – Rough** | **Stainless** |
| RP 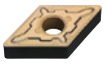 (4) | MM (4) |

| Order Number | Stock | Insert Number | | Dimensions (mm) | | | *3 WT (lbs) | *2 Shim | Shim Pin | Clamp Bridge | Spring | *1 Clamp Screw | Wrench |
|---|---|---|---|---|---|---|---|---|---|---|---|---|---|
| | L | | | DCONMS | LF | WF | | | | | | | |
| **H63TH-DDJNL-L15-3** | ★ | DN○A<br>DN○G<br>DN○M<br>DNMX | 43○ | 63 | 140 | 30 | 4.9 | LLSDN43<br>(LLSDN42) | LLP24 | DCK2613 | DCS1 | DC0621T | TKY20F |

*1 Clamp Torque (lbf-in) : DC0621T=44
*2 Please use shim no. LLSDN42 with .25 inch thick inserts. When using .25 inch thick inserts, the shim should be ordered separately.
*3 WT : Mass
Note 1) Dimensions shown for insert corner RE .031 inch.



| | |
|---|---|
| DDJN type inserts | ➢ A112–A118 |
| CBN & PCD inserts | ➢ B031–B034, B059 |

| | |
|---|---|
| CUTTING CONDITIONS | ➢ SEE SECTION A |
| SPARE PARTS | ➢ N001 |
| TECHNICAL DATA | ➢ P001 |

# FOR MULTI-TASK MACHINES

## PRGC

**External turning • Facing • Copying**

Medium

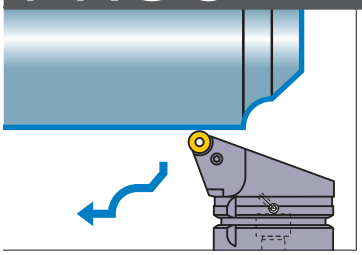

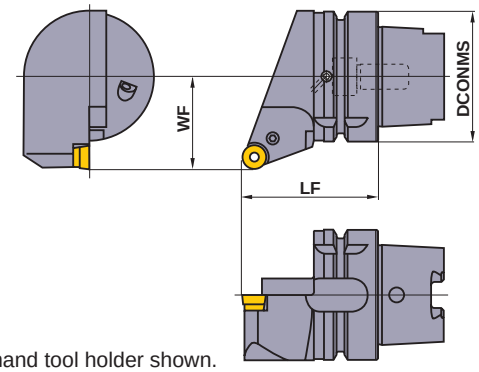

(12)

Right hand tool holder shown.

| Order Number | Stock R | Stock L | Insert Number | | Dimensions (mm) DCONMS | LF | WF | *2 WT (lbs) | Shim | Shim Pin | Clamp Lever | *1 Clamp Screw | Wrench |
|---|---|---|---|---|---|---|---|---|---|---|---|---|---|
| **H63TH-PRGCR/L-DX12** | ★ | ★ | RCMX | 1204M0 | 63 | 65 | 45 | 2.6 | LLSRN123 | LLP13 | LLCL112 | LLCS106 | HKY25R |

*1 Clamp Torque (lbf-in) : LLCS106=19
*2 WT : Mass

## PRDC

**External turning • Facing • Copying**

Medium

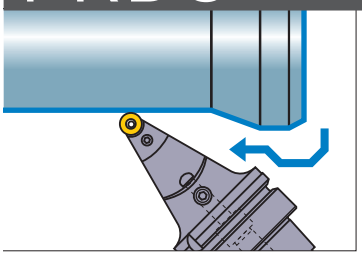

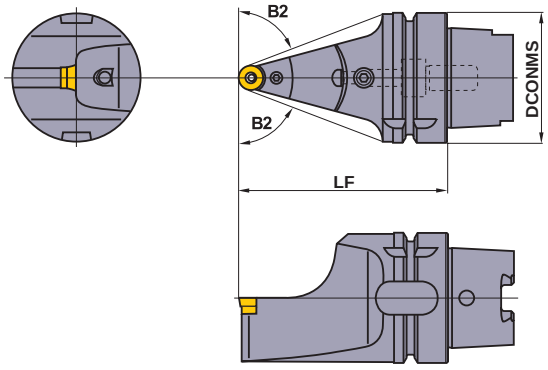

(12)

| Order Number | Stock | Insert Number | | Dimensions (mm) DCONMS | LF | B2 | *2 WT (lbs) | Shim | Shim Pin | Clamp Lever | *1 Clamp Screw | Plug | Wrench |
|---|---|---|---|---|---|---|---|---|---|---|---|---|---|
| **H63TH-PRDCN-H12** | ★ | RCMX | 1204M0 | 63 | 100 | 69° | 3.1 | LLSRN123 | LLP13 | LLCL112 | LLCS106 | HGM-PT1/8 | HKY25R |
| **H63TH-PRDCN-L12** | ★ | | | 63 | 140 | 75° | 5.1 | LLSRN123 | LLP13 | LLCL112 | LLCS106 | HGM-PT1/8 | HKY25R |

*1 Clamp Torque (lbf-in) : LLCS106=19
*2 WT : Mass

## RECOMMENDED CUTTING CONDITIONS

| | Work Material | Hardness | Cutting Mode | Breaker | Grade | Cutting Speed (SFM) |
|---|---|---|---|---|---|---|
| P | Mild Steel | ≤180HB | Medium Cutting | **Standard** | **UE6110** | 670−1150 |
| | Carbon Steel • Alloy Steel | 180HB−350HB | Medium Cutting | **Standard** | **UE6110** | 490−850 |
| M | Stainless Steel | ≤200HB | Medium Cutting | **Standard** | **US735** | 230−425 |

Note 1) Insert photo is an example. Letters show chip breaker style, figures show inscribed circle.

**★ : Stocked in Japan**

**PRGC type inserts** ➤ A167
**PRDC type inserts** ➤ A167

# SVPB

**Facing • Copying**

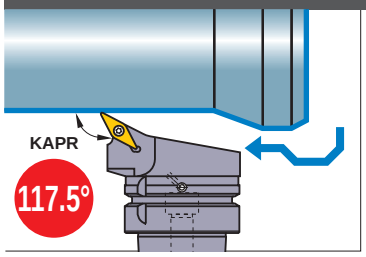


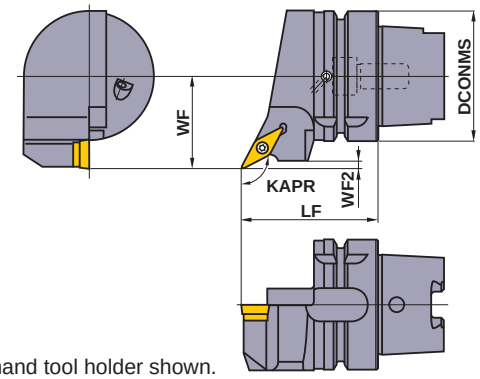


Right hand tool holder shown.

| Finish | Light |
|---|---|
| R/L-F | SV |
| (3) | (3) |
| Medium | Medium |
| MV | MP |
| (3) | (3) |
| CBN | |
| (3) | |

| Order Number | Stock R | Stock L | Insert Number | | Dimensions (mm) DCONMS | LF | WF | WF2 | ★2 WT (lbs) | Shim | Shim Pin | ★1 Clamp Screw | Wrench |
|---|---|---|---|---|---|---|---|---|---|---|---|---|---|
| **H63TH-SVPBR/L-DX16** | ★ | ★ | VB○T VB○W | 33○ | 63 | 65 | 45 | 3.8 | 2.4 | SPSVN32 | BCP141 | TS35D | TKY15F |

★1 Clamp Torque (lbf-in) : TS35D=31
★2 WT : Mass

# SVVB

**Facing • Copying**

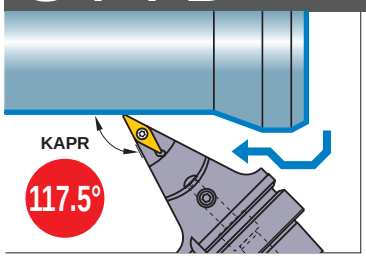


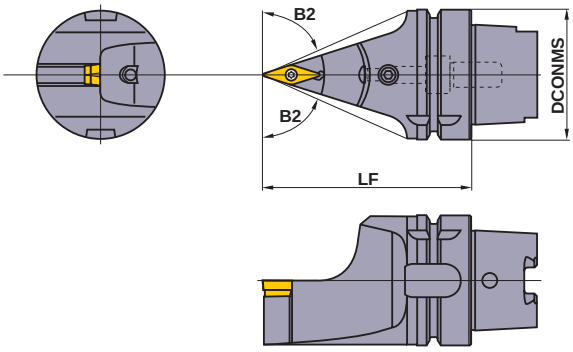


| Finish | Light |
|---|---|
| R/L-F | SV |
| (3) | (3) |
| Medium | Medium |
| MV | MP |
| (3) | (3) |
| CBN | |
| 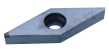 (3) | |

| Order Number | Stock | Insert Number | | Dimensions (mm) DCONMS | LF | B2 | ★2 WT (lbs) | Shim | Shim Pin | ★1 Clamp Screw | Plug | Wrench |
|---|---|---|---|---|---|---|---|---|---|---|---|---|
| **H63TH-SVVBN-H16** | ★ | VB○T VB○W | 33○ | 63 | 100 | 66.5° | 2.9 | SPSVN32 | BCP141 | TS35D | HGM-PT1/8 | TKY15F |
| **H63TH-SVVBN-L16** | ★ | | | 63 | 140 | 72.5° | 4.9 | SPSVN32 | BCP141 | TS35D | HGM-PT1/8 | TKY15F |

★1 Clamp Torque (lbf-in) : TS35D=31
★2 WT : Mass

## RECOMMENDED CUTTING CONDITIONS

| | Work Material | Hardness | Cutting Mode | Breaker | Grade | Cutting Speed (SFM) |
|---|---|---|---|---|---|---|
| P | Mild Steel | ≤180HB | Finish Cutting | **F** | **AP25N** | 820 (490—985) |
| | | | Medium Cutting | **MV** | **UE6020** | 655 (490—820) |
| | Carbon Steel Alloy Steel | 180HB—350HB | Finish Cutting | **F** | **AP25N** | 690 (490—850) |
| | | | Medium Cutting | **MV** | **UE6020** | 555 (390—690) |
| M | Stainless Steel | ≤200HB | Medium Cutting | **MM** | **US735** | 330 (230—395) |
| K | Gray Cast Iron | Tensile Strength ≤350MPa | Medium Cutting | **MV** | **UE6020** | 555 (460—655) |

Note 1) Dimensions shown for insert corner RE .031 inch.
Note 2) Insert photo is an example. Letters show chip breaker style, figures show inscribed circle.


**SVPB type inserts** ➤ A179—A183
**SVVB type inserts** ➤ A179—A183
**CBN inserts** ➤ B053
**SPARE PARTS** ➤ N001
**TECHNICAL DATA** ➤ P001

# FOR MULTI-TASK MACHINES

## MG

**Grooving**

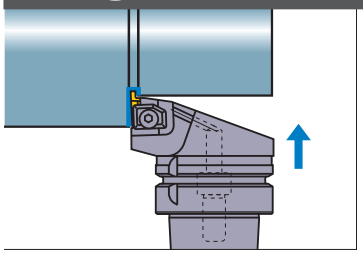

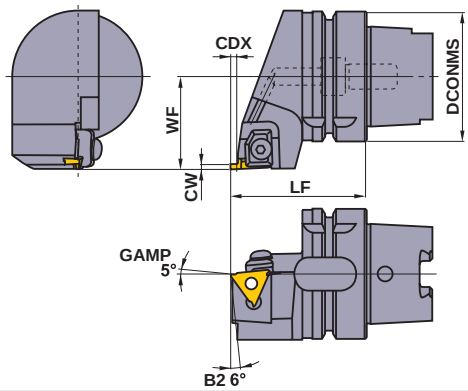


Right hand tool holder shown.

| Order Number | Stock R | Stock L | Insert Number | | Dimensions (mm) CW | CDX | DCONMS | LF | WF | ⋆2 WT (lbs) | Clamp Bridge | Clamp Screw ⋆1 | Spring | Wrench |
|---|---|---|---|---|---|---|---|---|---|---|---|---|---|---|
| **H63TH-MGHR/L-DX4315** | ★ | ★ | MGTR/L | 43125 I 43470 | 1.25 | 1.2 | 63 | 65 | 45 | 2.6 | MTK1R/L | HBH06020 | MES3 | HKY40R |
| | | | | | 1.45 | 1.5 | | | | | | | | |
| | | | | | 1.5≤CW≤2.3 | 3 | | | | | | | | |
| **H63TH-MGHR/L-DX4323** | ★ | ★ | | | 2.3<CW≤3.3 | 4.5 | | | | | | | | |
| **H63TH-MGHR/L-DX4333** | ★ | ★ | | | 3.3<CW≤4.7 | 4.5 | | | | | | | | |

⋆1 Clamp Torque (lbf-in) : HBH06020=62
⋆2 WT : Mass

H

HSK-T TOOLS

## RECOMMENDED CUTTING CONDITIONS

| | Work Material | Hardness | Grade | Cutting Speed (SFM) | Feed (IPR) |
|---|---|---|---|---|---|
| P | Carbon Steel Alloy Steel | 180—350HB | **VP20MF** | 390 (330—460) | .0039 (.0012—.0071) |
| | | | **NX2525** | 425 (330—525) | .0047 (.0012—.0079) |
| M | Stainless Steel | ≤200HB | **VP20MF** | 390 (330—460) | .0039 (.0012—.0071) |
| K | Gray Cast Iron | Tensile Strength≤350MPa | **VP20MF** | 390 (330—460) | .0039 (.0012—.0071) |

**★ : Stocked in Japan**
**<10 inserts in one case> <1 insert in one case for CBN>**

## INSERTS FOR MG TYPE

| Order Number | Stock | | | | | | | Dimensions (mm) | | | | | | Geometry |
|---|---|---|---|---|---|---|---|---|---|---|---|---|---|---|
| | Coated | | Cermet | | Carbide | | CBN | | | | | | | |
| | VP20MF | | NX2525 | | UTi20T | | MB8025 | CW | CDX | IC | W1 | RER/L | LE | |
| | R | L | R | L | R | L | R | | | | | | | |
| **MGTR/L43125** | ★ | ★ | ★ | ★ | ★ | ★ | ★ | 1.25 | 1.2 | 12.7 | 4.76 | 0.2 | 2.7 | **MGTR/L...** |
| **MGTR/L43145** | ★ | ★ | | ★ | ★ | ★ | | 1.45 | 1.5 | 12.7 | 4.76 | 0.2 | – | |
| **MGTR/L43150** | ★ | ★ | ★ | ★ | ★ | ★ | ★ | 1.5 | 3 | 12.7 | 4.76 | 0.2 | 2.7 | |
| **MGTR/L43175** | ★ | ★ | ★ | ★ | ★ | ★ | | 1.75 | 3 | 12.7 | 4.76 | 0.2 | – | |
| **MGTR/L43200** | ★ | ★ | ★ | ★ | ★ | ★ | ★ | 2 | 3 | 12.7 | 4.76 | 0.2 | 2.7 | |
| **MGTR/L43230** | ★ | ★ | ★ | ★ | ★ | ★ | | 2.3 | 3 | 12.7 | 4.76 | 0.2 | – | |
| **MGTR/L43250** | ★ | ★ | ★ | ★ | ★ | ★ | ★ | 2.5 | 4.5 | 12.7 | 4.76 | 0.3 | 2.7 | |
| **MGTR/L43260** | ★ | ★ | ★ | | ★ | ★ | | 2.6 | 4.5 | 12.7 | 4.76 | 0.3 | – | |
| **MGTR/L43270** | ★ | ★ | | | ★ | ★ | | 2.7 | 4.5 | 12.7 | 4.76 | 0.3 | – | |
| **MGTR/L43280** | | ★ | | ★ | ★ | ★ | | 2.8 | 4.5 | 12.7 | 4.76 | 0.3 | – | |
| **MGTR/L43300** | ★ | ★ | ★ | ★ | ★ | ★ | ★ | 3 | 4.5 | 12.7 | 4.76 | 0.3 | 2.7 | |
| **MGTR/L43320** | ★ | | | | ★ | ★ | | 3.2 | 4.5 | 12.7 | 4.76 | 0.3 | – | |
| **MGTR/L43330** | | ★ | | ★ | ★ | ★ | | 3.3 | 4.5 | 12.7 | 4.76 | 0.3 | – | |
| **MGTR/L43350** | ★ | ★ | ★ | ★ | ★ | ★ | ★ | 3.5 | 4.5 | 12.7 | 4.76 | 0.3 | 2.7 | |
| **MGTR/L43400** | ★ | ★ | ★ | | ★ | ★ | ★ | 4 | 4.5 | 12.7 | 4.76 | 0.3 | 2.7 | |
| **MGTR/L43420** | ★ | ★ | ★ | | ★ | ★ | | 4.2 | 4.5 | 12.7 | 4.76 | 0.4 | – | |
| **MGTR/L43430** | ★ | ★ | ★ | | ★ | ★ | | 4.3 | 4.5 | 12.7 | 4.76 | 0.4 | – | |
| **MGTR/L43450** | ★ | ★ | ★ | ★ | ★ | ★ | | 4.5 | 4.5 | 12.7 | 4.76 | 0.4 | – | |
| **MGTR/L43470** | ★ | ★ | ★ | ★ | ★ | ★ | | 4.7 | 4.5 | 12.7 | 4.76 | 0.4 | – | |

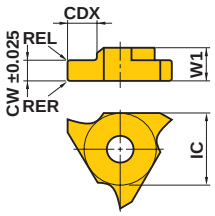


CBN Insert

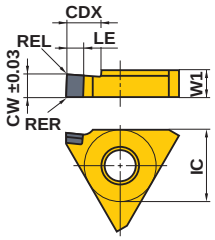


Right hand insert shown.

# FOR MULTI-TASK MACHINES

## MMTE

**Threading**

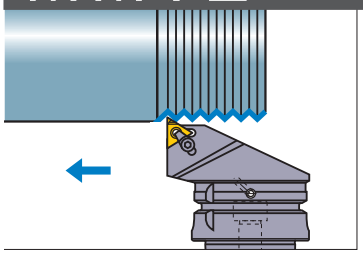

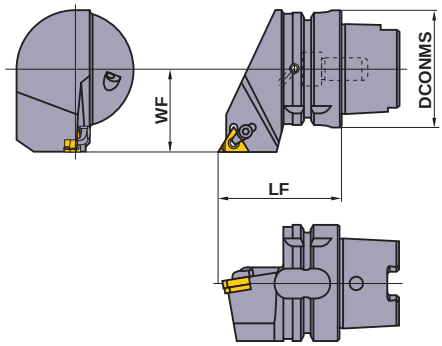


Right hand tool holder only.

| Order Number | Stock | Insert Number | | Dimensions (mm) | | | ⋆2 WT (lbs) | Clamp Bridge | Clamp Screw ⋆1 | Stop Ring | Shim | Shim Screw ⋆1 | Wrench F/R |
|---|---|---|---|---|---|---|---|---|---|---|---|---|---|
| | R | | | DCONMS | LF | WF | | | | | | | |
| **H63TH-MMTER-DX16** | ★ | MMT16ER | ○○○○○ | 63 | 65 | 45 | 2.6 | SETK51 | SETS51 | CR4 | CTE32TP15 | HFC03008 | TKY15F HKY20R |

⋆1 Clamp Torque (lbf-in) : SETS51=31, HFC03008=13
⋆2 WT : Mass

## MMTEN

**Threading**

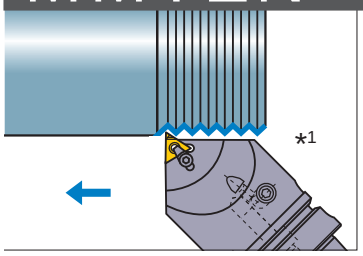


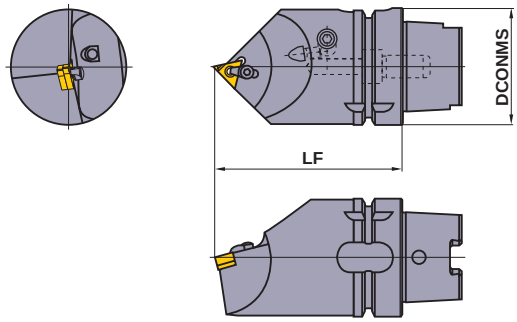


Tool holder for right hand insert only.

| Order Number | Stock | Insert Number | | Dimensions (mm) | | ⋆3 WT (lbs) | Clamp Bridge | Clamp Screw ⋆2 | Stop Ring | Shim | Shim Screw ⋆2 | Plug | Wrench F/R |
|---|---|---|---|---|---|---|---|---|---|---|---|---|---|
| | | | | DCONMS | LF | | | | | | | | |
| **H63TH-MMTENR-H16** | ★ | MMT16ER | ○○○○○ | 63 | 100 | 3.7 | SETK51 | SETS51 | CR4 | CTE32TP15 | HFC03008 | HGM-PT1/8 | TKY15F HKY20R |
| **H63TH-MMTENR-L16** | ★ | | | 63 | 140 | 6.0 | SETK51 | SETS51 | CR4 | CTE32TP15 | HFC03008 | HGM-PT1/8 | TKY15F HKY20R |

⋆1 For use with B axis tilted at 45 degrees.
⋆2 Clamp Torque (lbf-in) : SETS51=31, HFC03008=13
⋆3 WT : Mass

## RECOMMENDED CUTTING CONDITIONS

| | Work Material | Hardness | Grade | Cutting Speed (SFM) |
|---|---|---|---|---|
| P | Mild Steel | ≤180HB | **VP10MF** | 490 (230–755) |
| | | | **VP15TF** | 330 (195–460) |
| | Carbon Steel Alloy Steel | 180–350HB | **VP10MF** | 460 (260–655) |
| | | | **VP15TF** | 330 (195–460) |
| M | Stainless Steel | ≤200HB | **VP10MF** | 425 (260–590) |
| | | | **VP15TF** | 260 (130–390) |
| K | Gray Cast Iron | Tensile Strength ≤350MPa | **VP10MF** | 460 (260–655) |
| | | | **VP15TF** | 295 (195–390) |



★ : Stocked in Japan

MMT type inserts ➤ G022–G025

# MT

## Threading

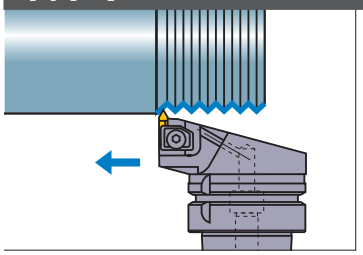

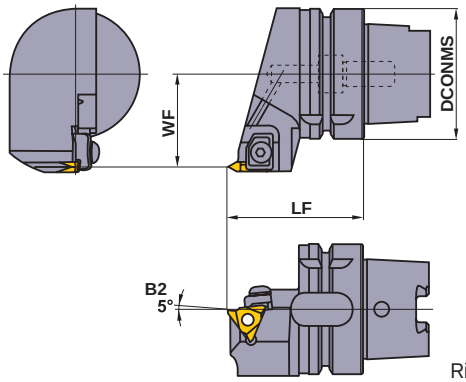


Right hand tool holder shown.

| Order Number | Stock | | Insert Number | | Dimensions (mm) | | | ⋆2 WT (lbs) | | ⋆1 | | |
|---|---|---|---|---|---|---|---|---|---|---|---|---|
| | R | L | | | DCONMS | LF | WF | | Clamp Bridge | Clamp Screw | Spring | Wrench |
| **H63TH-MTHR/L-DX43** | ★ | ★ | MTTR/L | 43○○○○ | 63 | 65 | 45 | 2.6 | MTK1R/L | HBH06020 | MES3 | HKY40R |

⋆1 Clamp Torque (lbf-in) : HBH06020=62
⋆2 WT : Mass

## RECOMMENDED CUTTING CONDITIONS

| | Work Material | Hardness | Grade | Cutting Speed (SFM) |
|---|---|---|---|---|
| P | Mild Steel | ≤180HB | **UP20M** | 460 (330−590) |
| | | | **NX2525** | 655 (490−820) |
| | | | **UTi20T** | 390 (330−490) |
| | Carbon Steel<br>Alloy Steel | 180HB−350HB | **UP20M** | 390 (330−490) |
| | | | **NX2525** | 555 (490−655) |
| | | | **UTi20T** | 330 (230−390) |
| M | Stainless Steel | ≤200HB | **UP20M** | 390 (260−490) |
| | | | **UTi20T** | 330 (230−425) |
| K | Gray Cast Iron | Tensile Strength ≤350MPa | **UP20M** | 260 (195−330) |
| | | | **UTi20T** | 260 (195−330) |
| | | | **HTi10** | 330 (230−425) |


**MT type inserts** ➤ **H018**
**SPARE PARTS** ➤ **N001**
**TECHNICAL DATA** ➤ **P001**

# FOR MULTI-TASK MACHINES

## INSERTS FOR MT TYPE

| Type | Order Number | Class | Coated | Cermet | | Carbide | | ISO Pitch mm (thread / inch) | Dimensions (mm) | | | Geometry |
|---|---|---|---|---|---|---|---|---|---|---|---|---|
| | | | UP20M | NX2525 | | UTi20T | HTi10 | | IC | W1 | RE | |
| General 60° | **MTTR436000** | G | | ★ | | ★ | | −0.8 | 12.7 | 4.76 | 0 | **MTTR/L(60°)** (G Class) |
| | **MTTR436001** | G | ★ | ★ | | ★ | ★ | 1.0−1.75 | 12.7 | 4.76 | 0.1 | 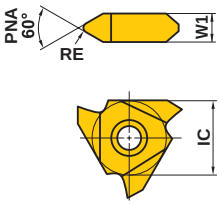 |
| | **MTTL436001** | G | ★ | | | ★ | ★ | 1.0−1.75 | 12.7 | 4.76 | 0.1 | |
| | **MTTR436002** | G | ★ | ★ | | ★ | ★ | 2.0−2.5 | 12.7 | 4.76 | 0.2 | |
| | **MTTL436002** | G | | ★ | | ★ | | 2.0−2.5 | 12.7 | 4.76 | 0.2 | |
| | **MTTR436003** | G | ★ | ★ | | ★ | ★ | 3.0−3.5 | 12.7 | 4.76 | 0.3 | |
| | **MTTL436003** | G | | ★ | | ★ | | 3.0−3.5 | 12.7 | 4.76 | 0.3 | |
| | **MTTR436004** | G | | ★ | | ★ | | 4.0−4.5 | 12.7 | 4.76 | 0.4 | Right hand insert shown. |
| General 55° | **MTTR435501** | G | | ★ | | ★ | | (28−10) | 12.7 | 4.76 | 0.1 | **MTTR(55°)** (G Class) |
| | **MTTR435502** | G | | ★ | | ★ | | (16−8) | 12.7 | 4.76 | 0.2 | 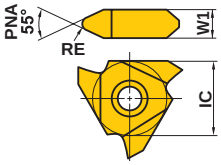 |
| | **MTTR435503** | G | | ★ | | ★ | | (11−8) | 12.7 | 4.76 | 0.3 | |
| | | | | | | | | | | | | Right hand insert shown. |

## ■ STANDARD OF DEPTH OF CUT

- The chart on the right shows the cutting depths when machining external ISO metric screw threads.
- When using cermet grades or cutting stainless steel, please increase the number of passes by 2 or 3 extra passes.

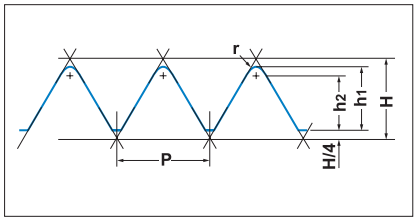


### ●Metric Screw Thread

Unit : mm

| P (Pitch) | | 0.75 | 1.00 | 1.25 | 1.50 | 1.75 | 2.00 | 2.50 | 3.00 | 3.50 | 4.00 | 4.50 |
|---|---|---|---|---|---|---|---|---|---|---|---|---|
| $h_1$ | | 0.46 | 0.61 | 0.77 | 0.92 | 1.07 | 1.23 | 1.53 | 1.84 | 2.15 | 2.45 | 2.76 |
| $h_2$ | | 0.35 | 0.47 | 0.59 | 0.70 | 0.82 | 0.94 | 1.17 | 1.41 | 1.65 | 1.87 | 2.11 |
| r (Corner Radius) | | 0.11 | 0.14 | 0.18 | 0.22 | 0.25 | 0.29 | 0.36 | 0.43 | 0.50 | 0.58 | 0.65 |
| Number of Passes | 1 | 0.18 | 0.20 | 0.20 | 0.25 | 0.25 | 0.25 | 0.30 | 0.30 | 0.35 | 0.35 | 0.40 |
| | 2 | 0.13 | 0.15 | 0.18 | 0.20 | 0.20 | 0.25 | 0.25 | 0.25 | 0.30 | 0.30 | 0.35 |
| | 3 | 0.10 | 0.10 | 0.12 | 0.15 | 0.20 | 0.20 | 0.20 | 0.25 | 0.25 | 0.25 | 0.30 |
| | 4 | 0.05 | 0.10 | 0.12 | 0.15 | 0.15 | 0.15 | 0.20 | 0.20 | 0.20 | 0.25 | 0.25 |
| | 5 | | 0.06 | 0.10 | 0.10 | 0.12 | 0.15 | 0.15 | 0.20 | 0.20 | 0.25 | 0.25 |
| | 6 | | | 0.05 | 0.07 | 0.10 | 0.10 | 0.10 | 0.15 | 0.20 | 0.20 | 0.20 |
| | 7 | | | | | 0.05 | 0.08 | 0.10 | 0.15 | 0.15 | 0.20 | 0.20 |
| | 8 | | | | | | 0.05 | 0.10 | 0.10 | 0.15 | 0.15 | 0.15 |
| | 9 | | | | | | | 0.08 | 0.10 | 0.10 | 0.15 | 0.15 |
| | 10 | | | | | | | 0.05 | 0.09 | 0.10 | 0.10 | 0.15 |
| | 11 | | | | | | | | 0.05 | 0.10 | 0.10 | 0.10 |
| | 12 | | | | | | | | | 0.05 | 0.10 | 0.10 |
| | 13 | | | | | | | | | | 0.05 | 0.10 |
| | 14 | | | | | | | | | | | 0.06 |

Note 1) The first pass causes a high load on the cutting edge.
In order to avoid damage, keep the depth of cut to 0.4−0.5 mm maximum.





★ : Stocked in Japan
<10 inserts in one case>

# EXTERNAL TURNING TOOL HOLDERS

**External turning • Facing**

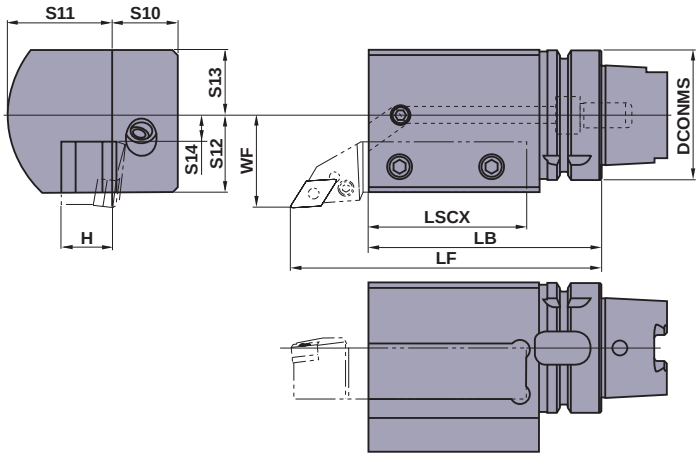


■This holder is for 25×25 size tools.
Please shorten the tool as shown below before use.

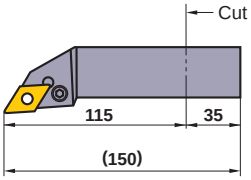


Right hand tool holder shown.

| Order Number | Stock | | Dimensions (mm) | | | | | | | | | | | WT* (lbs) | | |
|---|---|---|---|---|---|---|---|---|---|---|---|---|---|---|---|---|
| | R | L | DCONMS | LF | LB | LSCX | H | S10 | S11 | WF | S14 | S12 | S13 | | Clamp Screw | Plug |
| **H63TH-EV2525R/L-112** | ★ | ★ | 63 | 150 | 112 | 77 | 25 | 32 | 53 | 45 | 13 | 38 | 32 | 8.6 | HSS12025 | HGM-PT1/8 |

* WT : Mass

# EXTERNAL TURNING TOOL HOLDERS

**External turning • Facing**

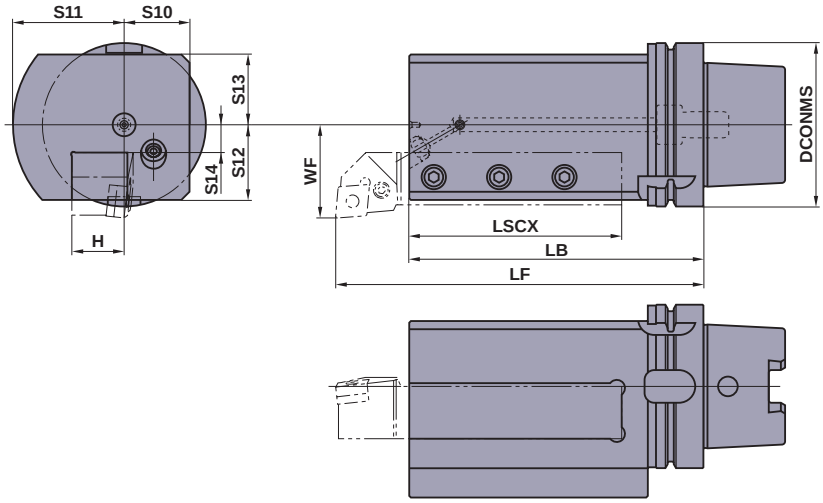


■This holder is for 32×32 and 32×25 size tools.

Right hand tool holder shown.

| Order Number | Stock | | Dimensions (mm) | | | | | | | | | | | WT* (lbs) | | |
|---|---|---|---|---|---|---|---|---|---|---|---|---|---|---|---|---|
| | R | L | DCONMS | LF | LB | LSCX | H | S10 | S11 | WF | S14 | S12 | S13 | | Clamp Screw | Plug |
| **H100TH-EV3232R/L-180** | ★ | ★ | 100 | 220 | 180 | 130 | 32 | 40 | 68 | 57 | 17 | 46 | 43 | 25.8 | HSS14035 | HSS06006 |

* WT : Mass
Note 1) Possible to fit a 25 x 25 tool by using a 7 mm plate.
Possible to fit a 1" x 1" tool by using a 6.6 mm plate.



SPARE PARTS ➤ N001
TECHNICAL DATA ➤ P001

# FOR MULTI-TASK MACHINES

## EXTERNAL TURNING TOOL HOLDERS

**External turning • Facing**

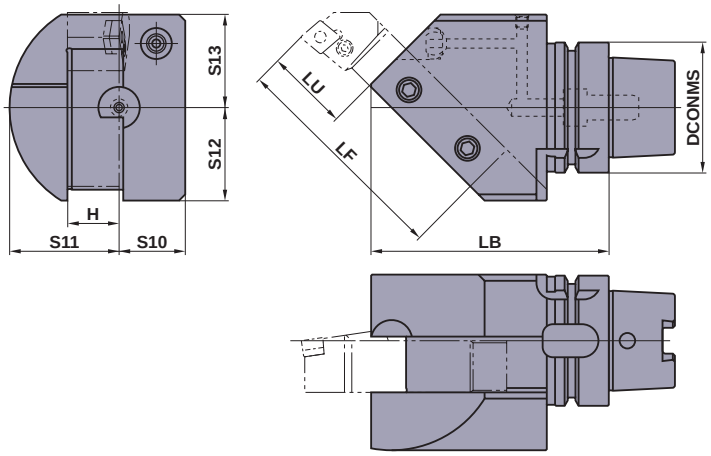


■This holder is for 25×25 size tools.
Please shorten the tool as shown below before use.

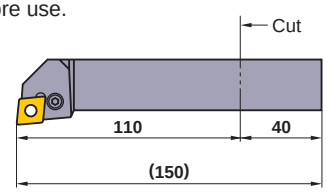


Mitsubishi Materials is licensed for production and distribution of these tools from MORI SEIKI CO., LTD under Patent No.3720202.

Right hand tool holder shown.

| Order Number | Stock | | Dimensions (mm) | | | | | | | | | WT* (lbs) | | |
|---|---|---|---|---|---|---|---|---|---|---|---|---|---|---|
| | R | L | DCONMS | LB | LU | LF | H | S10 | S11 | S12 | S13 | | Clamp Screw | Plug |
| **H63TH-EN2525R/L-115** | ★ | ★ | 63 | 115 | 40 | 110 | 25 | 32 | 53 | 45 | 45 | 8.2 | HSS12030 | HSS06006 |

* WT : Mass

H

HSK-T TOOLS

## EXTERNAL TURNING TOOL HOLDERS

**External turning • Facing**

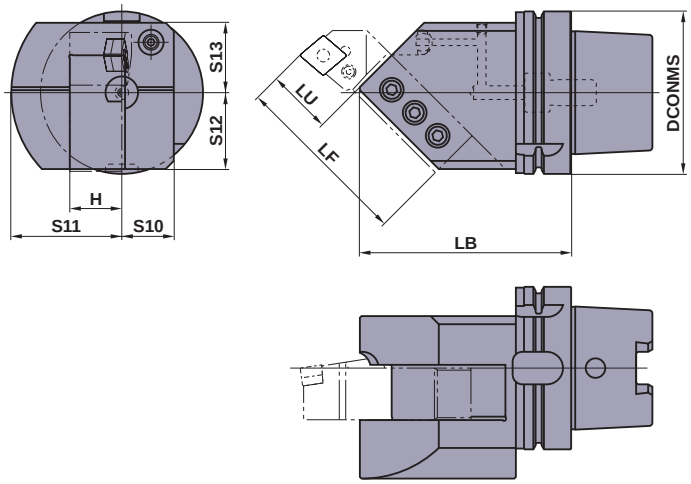


■This holder is for 32×32 and 32×25 size tools.
Please shorten the tool as shown below before use.

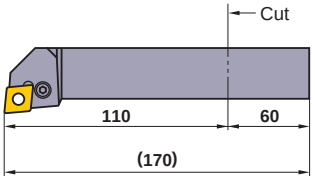


Mitsubishi Materials is licensed for production and distribution of these tools from MORI SEIKI CO., LTD under Patent No.3720202.

Right hand tool holder shown.

| Order Number | Stock | | Dimensions (mm) | | | | | | | | | WT* (lbs) | | |
|---|---|---|---|---|---|---|---|---|---|---|---|---|---|---|
| | R | L | DCONMS | LB | LU | LF | H | S10 | S11 | S12 | S13 | | Clamp Screw | Plug |
| **H100TH-EN3232R/L-130** | ★ | ★ | 100 | 130 | 40 | 110 | 32 | 32 | 68 | 47 | 43 | 14.6 | HSS14030 | HSS06006 |

* WT : Mass

Note 1) Possible to fit a 25 x 25 tool by using a 7 mm plate.
Possible to fit a 1" x 1" tool by using a 6.6 mm plate.

**★ : Stocked in Japan**

# EXTERNAL TURNING TOOL HOLDERS

**External turning • Facing**

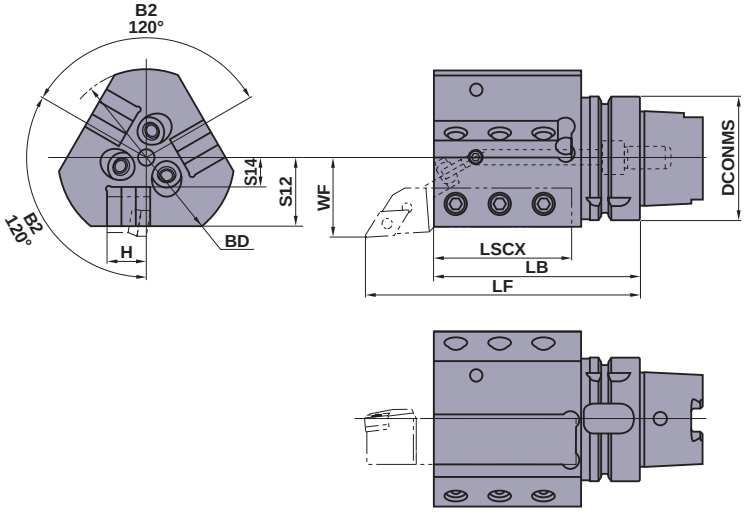


■This holder is for 20×20 size tools.
Please shorten the tool as shown below before use.

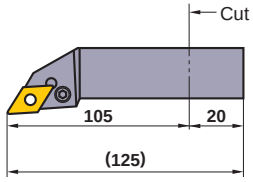


Right hand tool holder shown.

| Order Number | Stock | | Dimensions (mm) | | | | | | | | | WT* (lbs) | | | |
|---|---|---|---|---|---|---|---|---|---|---|---|---|---|---|---|
| | R | L | DCONMS | LF | LB | LSCX | H | BD | WF | S14 | S12 | | Clamp Screw | Nozzle Plug | Plug |
| **H63TH-EV2020R/L-105-3** | ★ | ★ | 63 | 140 | 105 | 70 | 20 | 90 | 40 | 15 | 35 | 6.4 | HSS12030 | HSS05012 | HSS06006 |

* WT : Mass

# BORING BAR HOLDERS

**Boring**

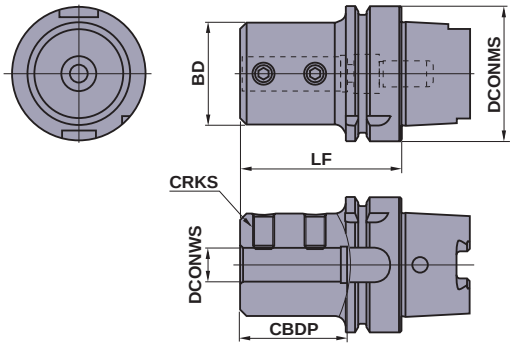


| Order Number | Stock | Dimensions (mm) | | | | | | WT* (lbs) | |
|---|---|---|---|---|---|---|---|---|---|
| | | DCONMS | BD | DCONWS | LF | CBDP | CRKS | | Clamp Screw |
| **H63TH-B08-65** | ★ | 63 | 28 | 8 | 65 | 40 | M8 | 2.0 | HSS08010 |
| **H63TH-B10-70** | ★ | 63 | 35 | 10 | 70 | 45 | M8 | 2.2 | HSS08012 |
| **H63TH-B12-70** | ★ | 63 | 42 | 12 | 70 | 45 | M8 | 2.4 | HSS08012 |
| **H63TH-B16-75** | ★ | 63 | 48 | 16 | 75 | 50 | M10 | 2.9 | HSS10016 |
| **H63TH-B20-75** | ★ | 63 | 52 | 20 | 75 | 50 | M10 | 3.1 | HSS10016 |
| **H63TH-B25-83** | ★ | 63 | 62 | 25 | 83 | 58 | M12 | 3.7 | HSS12016 |
| **H63TH-B32-87** | ★ | 63 | 62 | 32 | 87 | 62 | M12 | 3.7 | HSS12016 |
| **H63TH-B40-97** | ★ | 63 | 65 | 40 | 97 | 72 | M16 | 4.0 | HSS16012 |

* WT : Mass

Note 1) Please shorten a boring bar to the required shank length. This holder is for boring bars and indexable type drills.


SPARE PARTS ➤ N001
TECHNICAL DATA ➤ P001

# FOR MULTI-TASK MACHINES

## BORING BAR HOLDERS

**Boring**

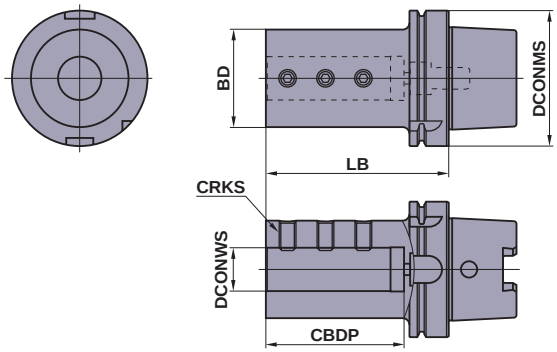


| Order Number | Stock | Dimensions (mm) | | | | | | WT* (lbs) | Clamp Screw |
|---|---|---|---|---|---|---|---|---|---|
| | | DCONMS | BD | DCONWS | LB | CBDP | CRKS | | |
| **H100TH-B25-120** | ★ | 100 | 62 | 25 | 120 | 88 | M12 | 8.6 | HSS12016 |
| **H100TH-B32-135** | ★ | 100 | 72 | 32 | 135 | 102 | M12 | 10.6 | HSS12018 |
| **H100TH-B40-150** | ★ | 100 | 82 | 40 | 150 | 117 | M16 | 13.0 | HSS16020 |
| **H100TH-B50-180** | ★ | 100 | 92 | 50 | 180 | 147 | M16 | 17.0 | HSS16020 |

* WT : Mass
Note 1) Please shorten a boring bar to the required shank length. This holder is for boring bars and indexable type drills.



## BORING BAR SLEEVES FOR H100TH-B32-135

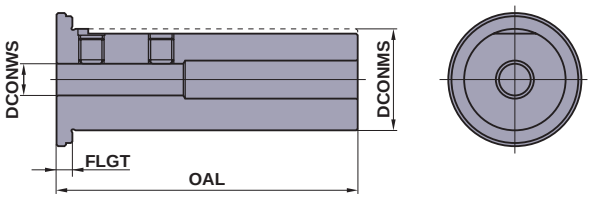


| Order Number | Stock | Dimensions (mm) | | | | WT* (lbs) | Clamp Screw |
|---|---|---|---|---|---|---|---|
| | | DCONWS | DCONMS | OAL | FLGT | | |
| **SL3208-90** | ★ | 8 | 32 | 95 | 5 | 1.3 | HSS06008 |
| **SL3210-90** | ★ | 10 | 32 | 95 | 5 | 1.1 | HSS08008 |
| **SL3212-90** | ★ | 12 | 32 | 95 | 5 | 1.1 | HSS08008 |
| **SL3216-90** | ★ | 16 | 32 | 95 | 5 | 1.1 | HSS08006 |
| **SL3220-90** | ★ | 20 | 32 | 95 | 5 | 0.9 | HSS08005 |

* WT : Mass
Note 1) These sleeves are only compatible with H100TH-B32-135 holder.

**★ : Stocked in Japan**

SPARE PARTS ➤ N001
TECHNICAL DATA ➤ P001

## Memo