MITSUBISHI

P200G

MITSUBISHI CARBIDE
MOTOR PARTS TOOLING

MOTOR PARTS SPECIAL TOOLING

Vol.1 ENGINE PARTS

CYLINDER HEAD
CYLINDER BLOCK
CRANK SHAFT
CON ROD
CAM SHAFT

MITSUBISHI MATERIALS

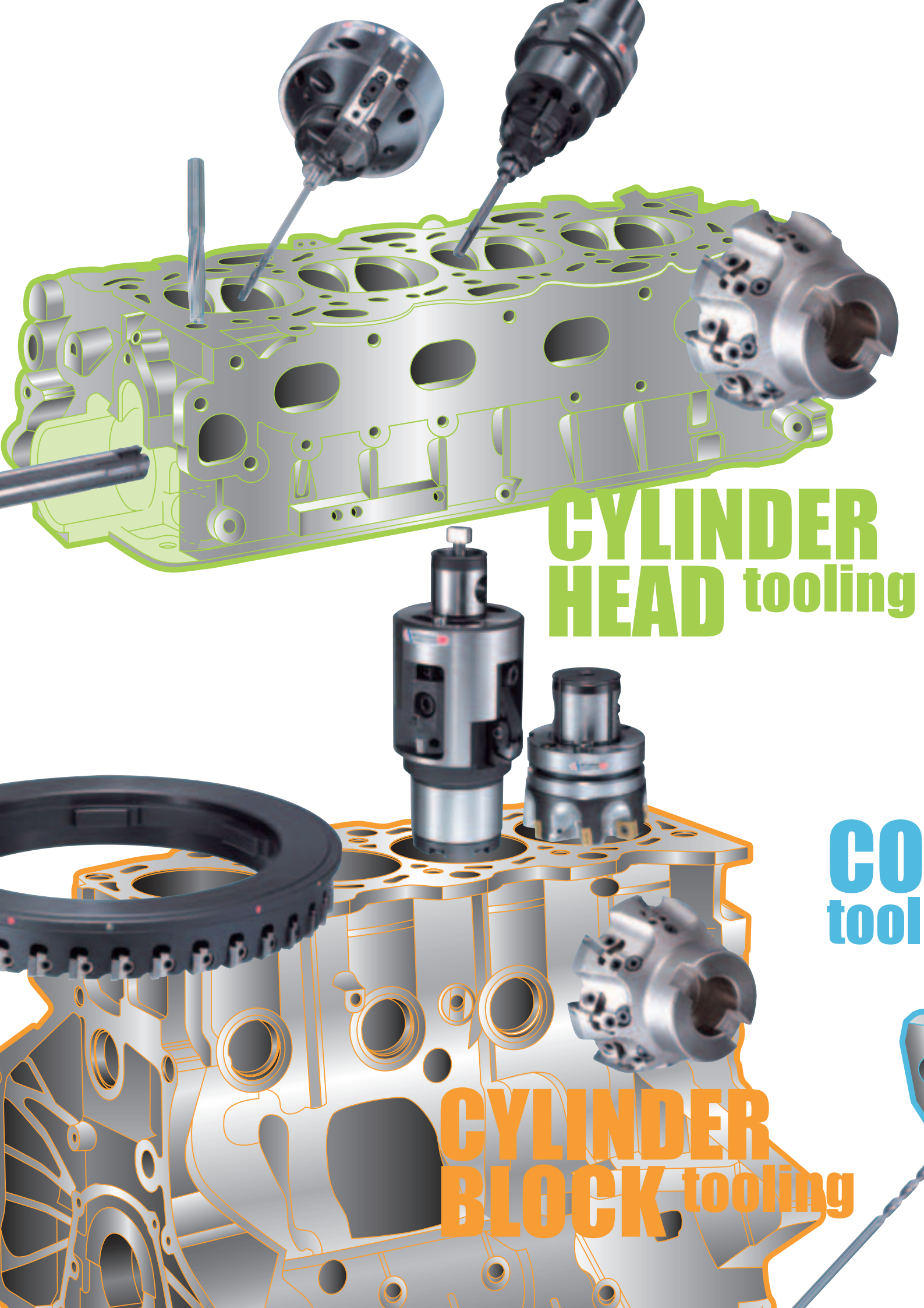
CYLINDER
HEAD tooling
CO
tool
CYLINDER
BLOCK tooling

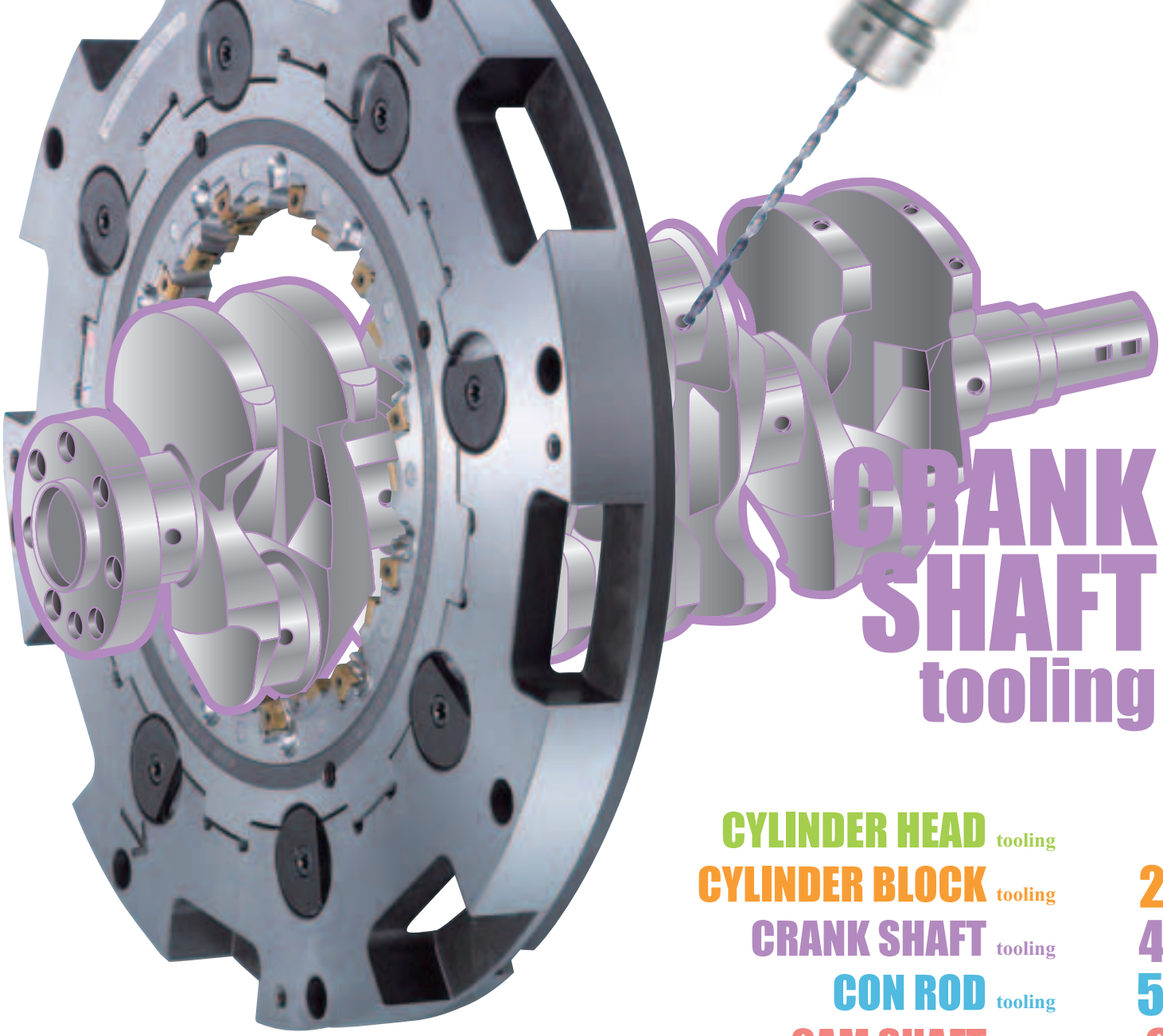

CRANK SHAFT tooling

CYLINDER HEAD tooling 1
CYLINDER BLOCK tooling 23
CRANK SHAFT tooling 45
CON ROD tooling 56
CAM SHAFT tooling 61

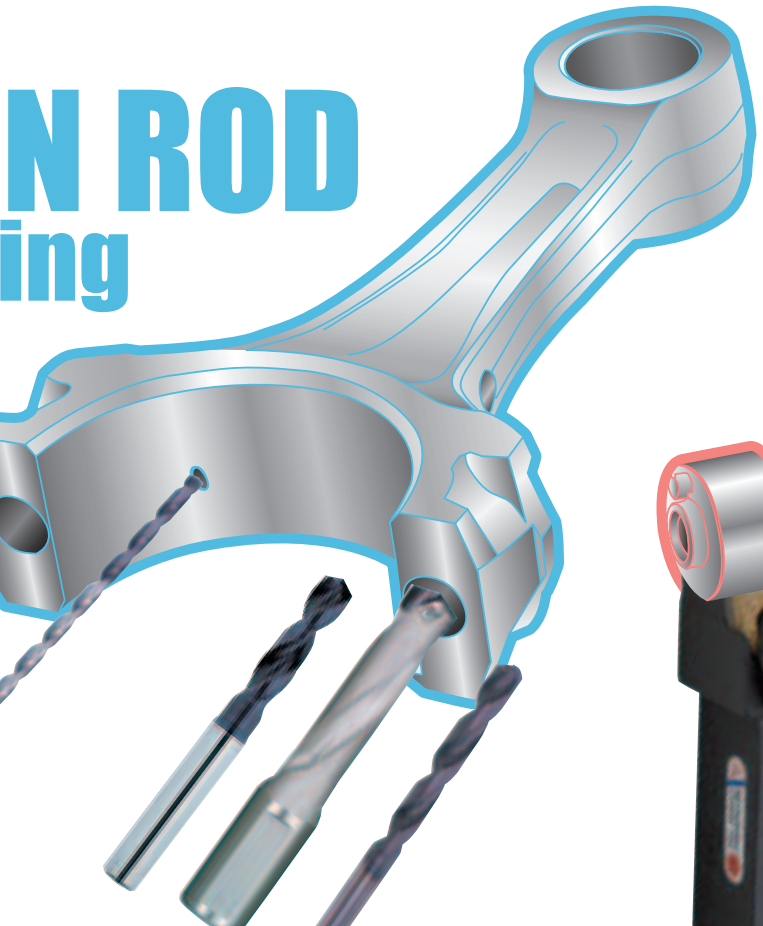

N ROD
ing

CAM SHAFT tooling

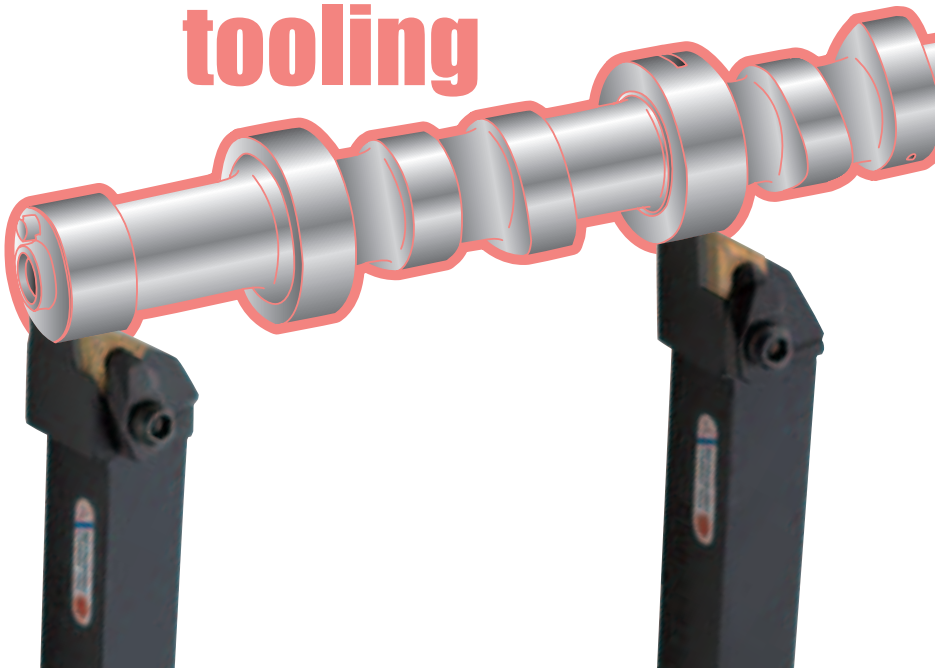

MITSUBISHI AUTOMOTIVE TOOLING

Cylinder head

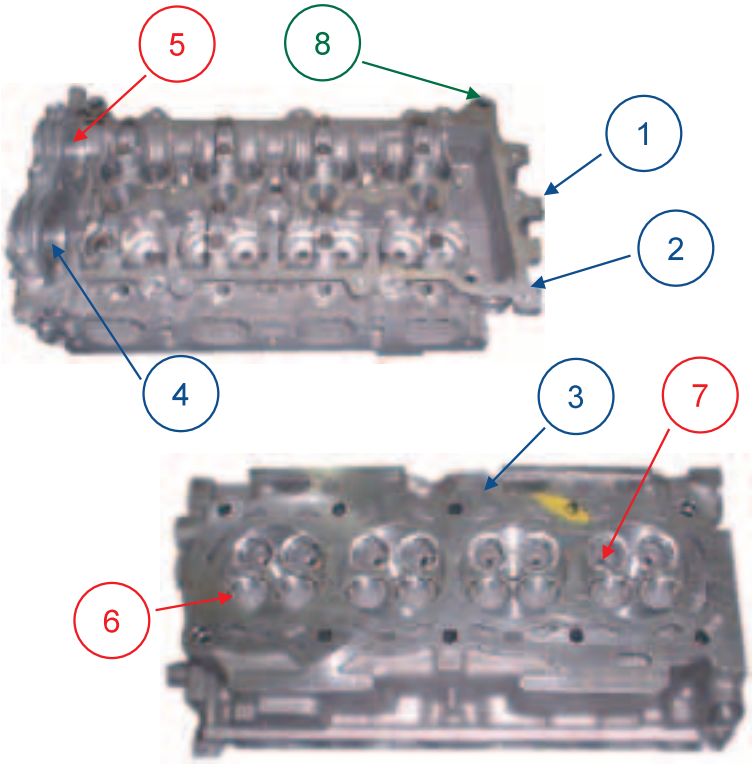

Main machining
① End faces
② Top face
③ Bottom face
④ Cam shaft bore half
⑤ Cam shaft bore (after cap installation)
⑥ Valve seat finishing
⑦ Valve seat / valve guide hole
⑧ Datum hole

Machining methods
Milling
Boring
Drilling
Reaming

∗ Cylinder head body material
: Aluminium

OP.1 (Roughing)

Operation : Top and bottom face

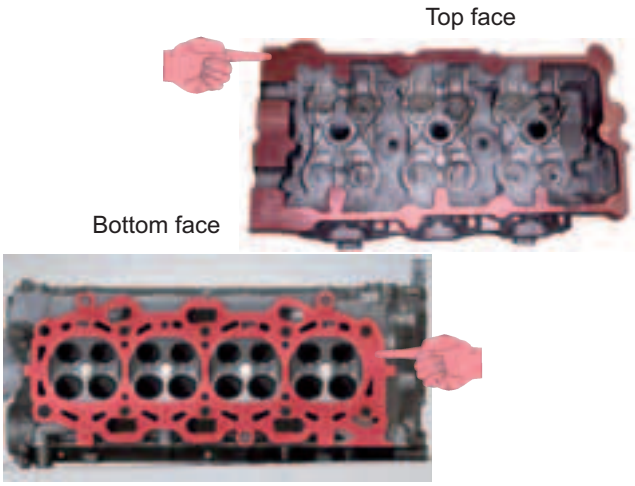

NR10000

Tool features
Rough milling cutter with high wear and weld resistant MD220 (PCD) inserts for high speed machining. Chamfer honed main cutting edges maintains the insert edge strength.

Cutting conditions
vc=1,000－4,500m/min fz=0.05－0.30mm/tooth
ap=0.3－3.5mm
Wet

Tooling Sheet 1

OP.2 (Finishing)

Operation : Top and bottom face

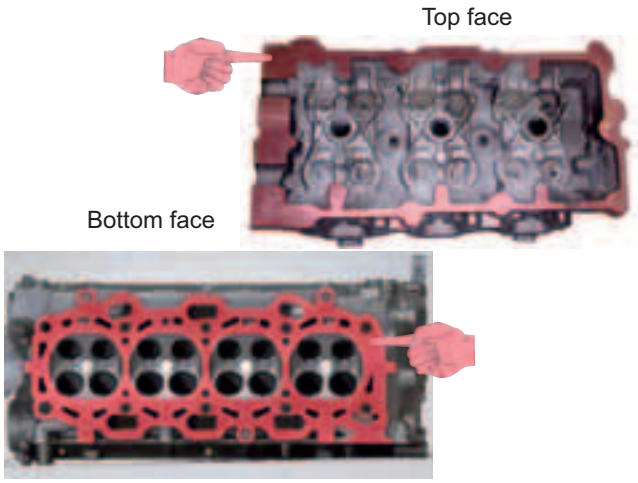

Tool features
Finish milling cutter with high wear and weld resistant MD220 (PCD) inserts for high speed machining.
R-shaped sub cutting edges give a high quality surface finish.

Cutting conditions
vc=1,000－4,500m/min fz=0.05－0.20mm/tooth
ap=0.3－2.0mm
Wet

Tooling Sheet 2

OP.2A (Bottom surface finishing) For machining centres

Operation : Bottom face

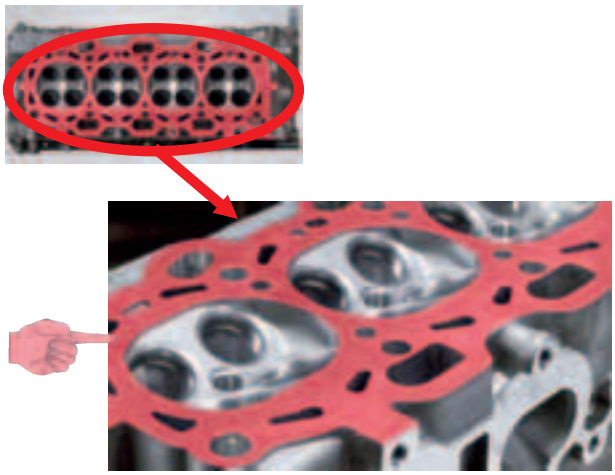

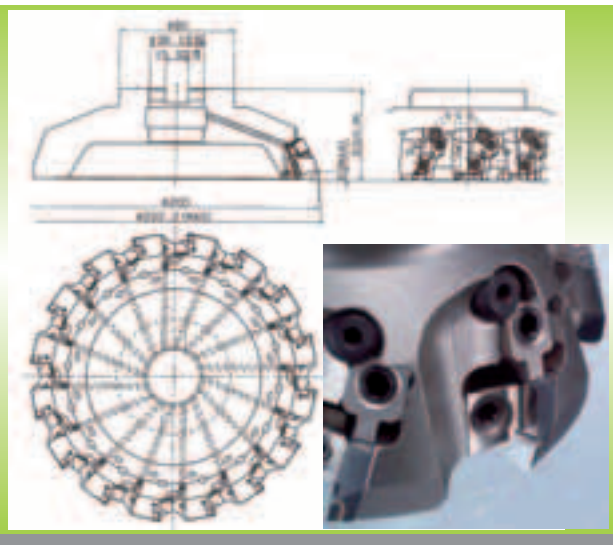

Tool features
NF10000 facemill with standard PCD inserts. Cutter body with through air & coolant holes. Suitable for HSK-A63. Lightweight construction steel body.
(Ø200 : Cutter body weight 6.3kg Total weight 8.4kg)

Cutting conditions
vc=3,142m/min n=5,000min^{-1} fz=0.075mm/tooth
vf=6,000mm/min ap=0.5mm
Wet

Tooling Sheet 3

OP.2B (Bottom surface finishing)

Operation : Bottom face

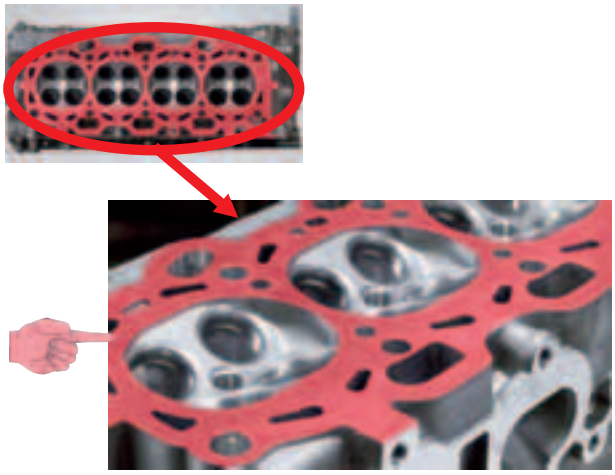

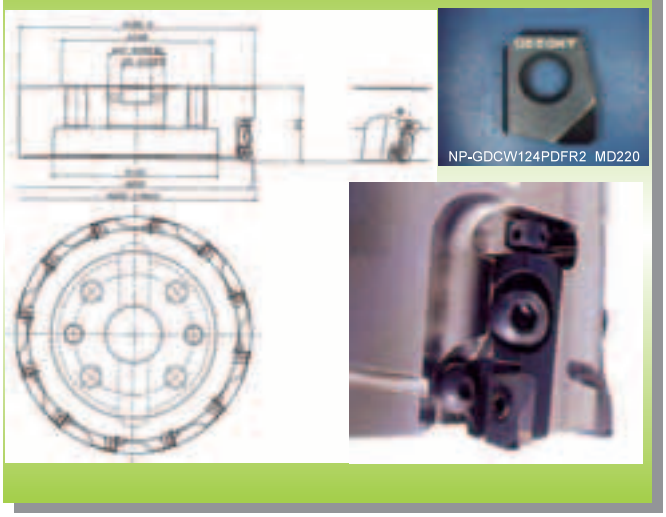

Tool features
V10000 facemill with standard PCD inserts and ultra-lightweight duralumin body. (Ø200 : Body weight 3.3kg) Also suitable for special machines.

Cutting conditions
vc=2,011m/min n=3,200min^{-1} fz=0.156mm/tooth
vf=5,984mm/min ap=0.3mm
Wet

Tooling Sheet 4

OP.2C (Bottom surface finishing) For special machines

Operation : Bottom face

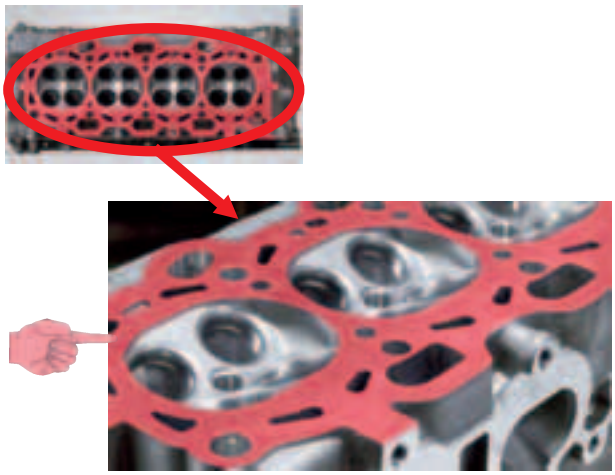

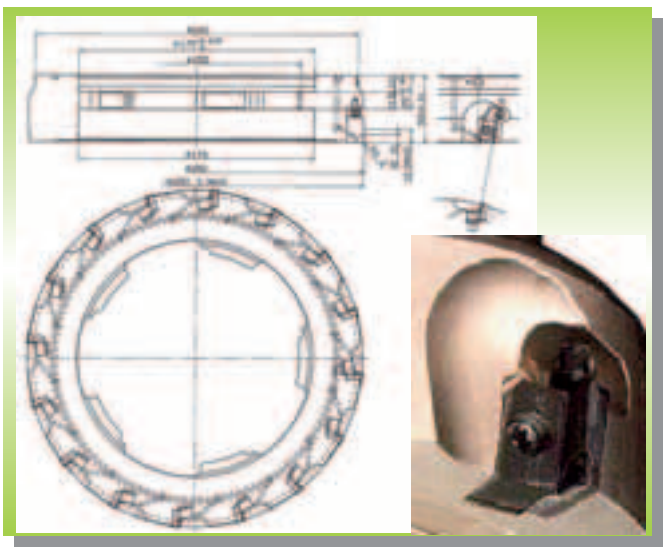

Tool features
AF5000 facemill with standard PCD inserts. With through air & coolant holes. Use of quick change system with single bolt mounting (QFB) for easy tool change. (Ø250 : Body weight 9kg)

Cutting conditions
vc=1,963m/min n=2,500min^{-1} fz=0.12mm/tooth
vf=4,800mm/min ap=0.5mm
Wet

Tooling Sheet 5

OP.3 (Pre machining of valve guide stem location) For machining centres

Operation : Bottom face

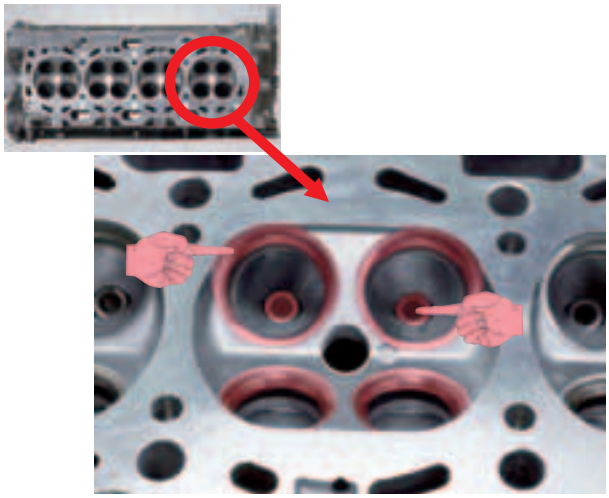

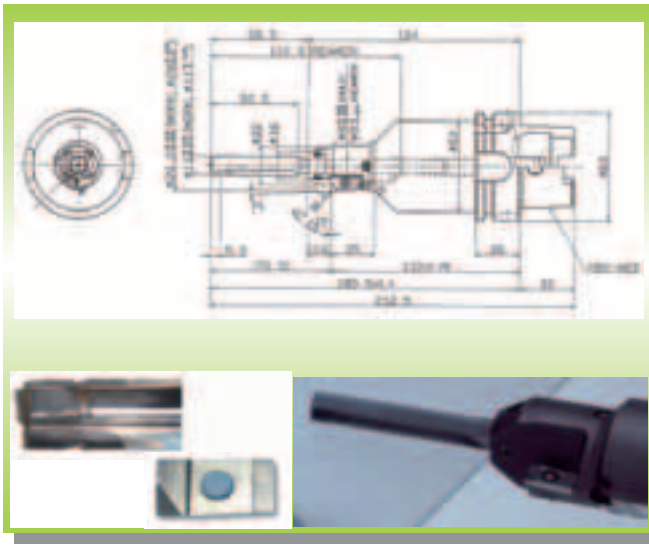

Tool features
Reamer for machining guide holes. 3-flute PCD cutting edge for high roundness accuracy and smooth surface finishing. PCD insert for machining seat holes has a function allowing minor adjustment of the hole diameter and seat face position.

Cutting conditions
vc=150 / 400m/min n=4,343min^{-1} fr=0.16 / 0.08mm/rev
vf=695 / 347mm/min ap=0.25mm/per side
Wet

Tooling Sheet 6

OP.4A-1 (Finishing cam bearing housing, short) For machining centres

Operation : Top face

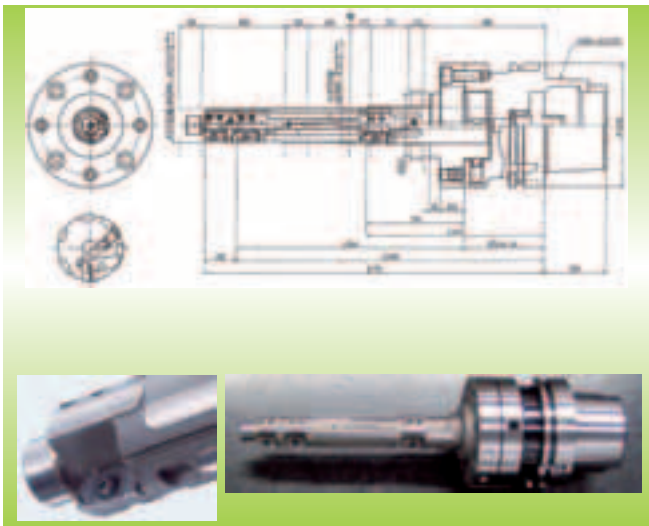

Tool features
Insert type reamer with a carbide guide pad. Uses PCD inserts with an adjustable cutting edge run-out function. A short type tool finish machines the datum cam bearing bore. A longer type is used for subsequent finishing the other cam bearing bores. Accuracy is maintained by using the self guiding datum bore machined by the short type.

Cutting conditions
vc=242m/min n=3,000min^{-1} fr =0.10mm/rev
vf=300mm/min ap=0.5mm/per side
Wet

Tooling Sheet 7

OP.4A-2 (Cam bearing housing, long) For machining centres

Operation : Top face

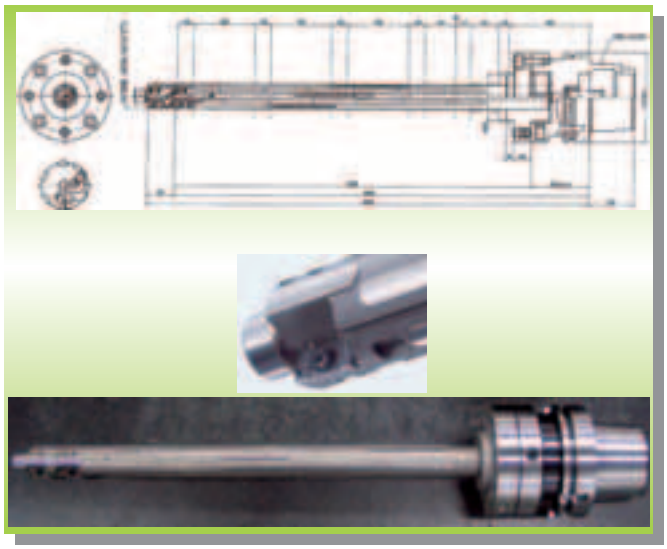

Tool features
Insert type reamer with a carbide guide pad. Uses PCD inserts with an adjustable cutting edge run-out function. Accuracy is maintained when using this longer type for finishing the other cam bearing housings by utilising the self guiding datum cam bore machined by the short type.

Cutting conditions
vc=242m/min n=3,000min^{-1} fr =0.10mm/rev
vf=300mm/min ap=0.5mm/per side
Wet

Tooling Sheet 8

OP.4B (Finishing cam bearing housing bores) For special machines

Operation : Top face

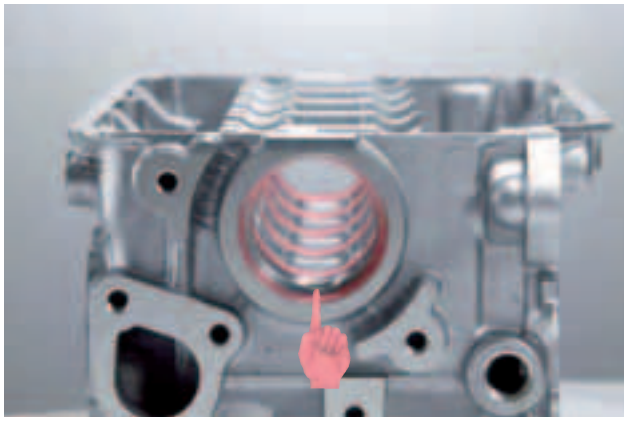

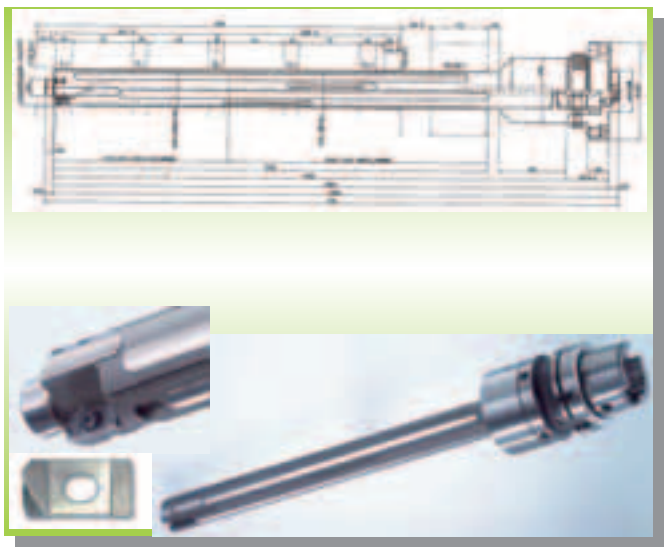

Tool features
Insert type reamer for finishing the cam bearing housings. With a special cemented carbide pad for self guiding.
(SOHC head, cam bearing housing bores : Ø45)

Cutting conditions
vc=353m/min n=2,500min^{-1} fr =0.12mm/rev
vf=300mm/min ap=0.5mm/per side
Wet

Tooling Sheet 9

OP.4C (Finishing cam bearing housing bores) For special machines

Operation : Top face

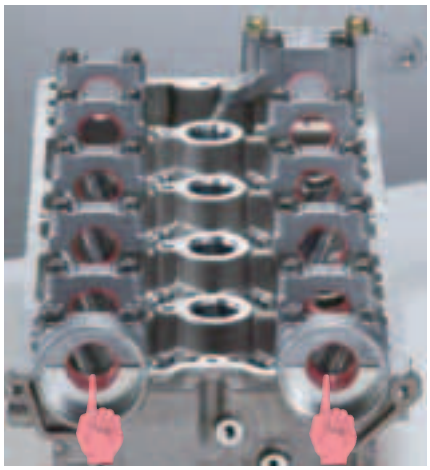

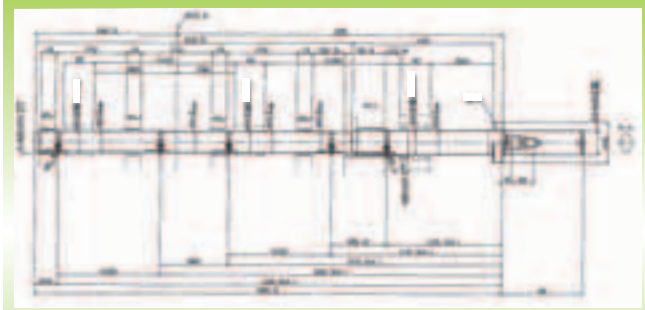

Tool features
Line boring bar for finishing cam bearing housing bores. Solid carbide body shank prevents deflection and vibration to enable highly accurate boring.

Cutting conditions
vc=314m/min n=4,000min^{-1} fr =0.05mm/rev
vf=200mm/min ap=0.25mm/per side
Wet

Tooling Sheet 10

OP.5A-1 (Valve guide and seat surfaces) For special machines

Operation : Bottom face

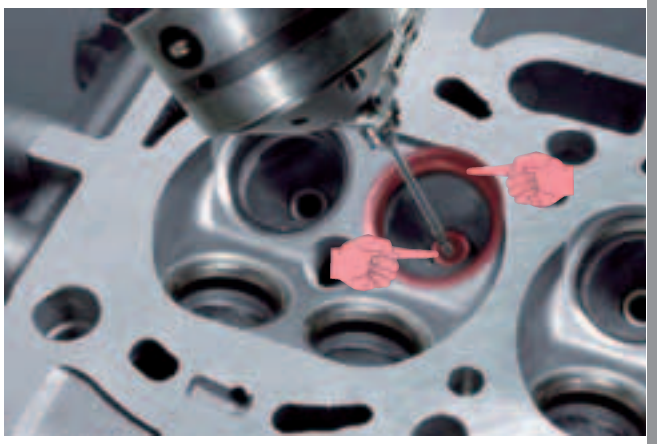

Tool features
The slider mechanism is maintenance free for long periods. Lower costs with reduction in non-machining time. Constant application of a fixed pressure by means of a slider disc spring maintains the accuracy of the slider mechanism.

Cutting conditions
vc=81.6m/min n=1,000min^{-1} fr =0.05mm/rev
vf=60mm/min ap=0.1mm/per side
Wet

Tooling Sheet 11

OP.5A-2 (Valve guide and seat surfaces) For special machines

Specially designed for the Apollo cutter
Reamer chuck spindle

Tool features
For use in combination with the traverse type Apollo cutter. To enable easy installation and detachment of the reamer. Greatly reduced tool change time.

Tooling Sheet 12

OP.5A-3 (Guide holes) For special machines

Operation : Bottom face

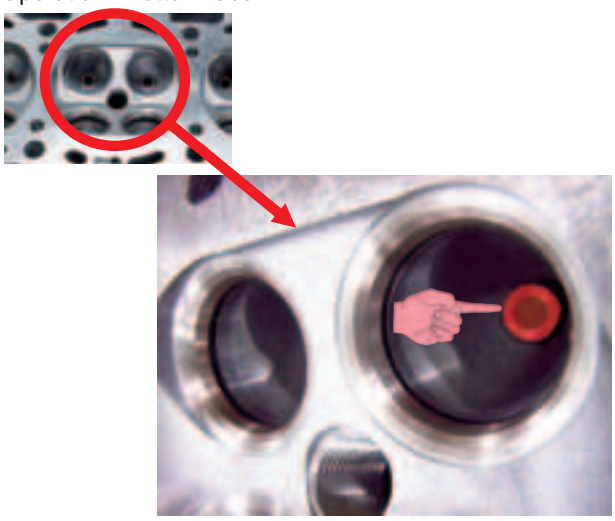

Specially designed for the Apollo cutter
Reamer with guide pad

Tool features
Reamer with a guide pad reduces wandering. Use of a PCD grade enables cutting of the hard materials contained in sintered material. However, controlling the cutting conditions to prevent excessive cutting heat is necessary.

Cutting conditions
vc=40m/min n=2,120min^{-1} fr =0.12mm/rev
Wet

Tooling Sheet 13

OP.5A-4 (Valve guide and seat surfaces) For special machines

Operation : Bottom face

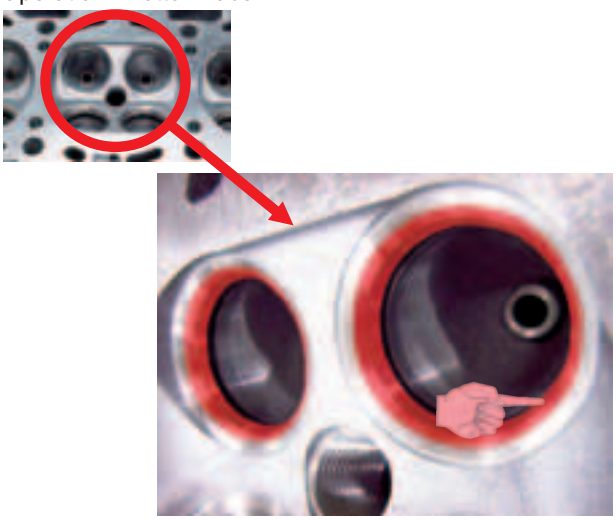

Specially designed for the Apollo cutter CBN blade

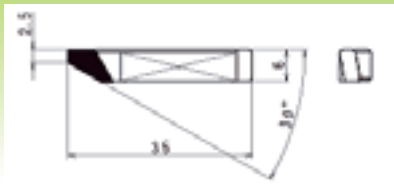

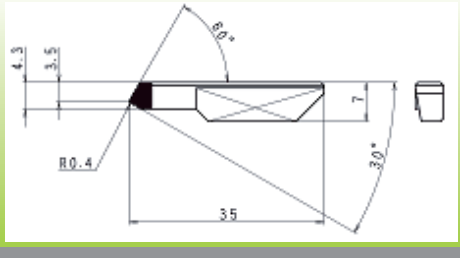

Tool features
Use of a CBN grade with high wear resistance. Traverse machining only on 45° surfaces for maintaining machining accuracy. The grade is choosen according to the work material (sintered material) type.

Cutting conditions
vc=81.6m/min n=1,000min^{-1} fr=0.05mm/rev
vf=60mm/min ap=0.1mm
Wet

Tooling Sheet 14

OP.5B-1 (Roughing of valve seat surfaces + stem guide holes) For machining centres

Operation : Bottom face

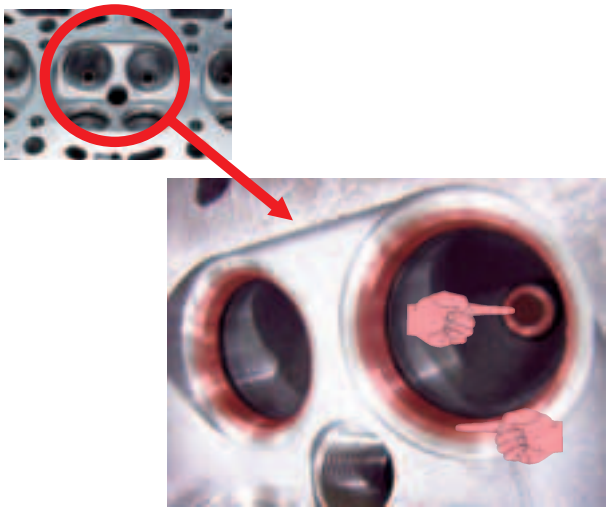

Apollo cutter
(Plunge type)

Tool features
Combined tool for rough machining the valve stem guide holes and seat surfaces. With an adjustable positioning guide pad to prevent vibration caused by plunge cutting. Use of a CBN blade with maximized rigidity + a solid carbide tool holder + a multi-flute solid carbide reamer.

Cutting conditions
vc=112.2m/min n=1,500min^{-1} fr=0.12mm/rev
vf=180mm/min ap=0.5mm/per side
Wet

Tooling Sheet 15

OP.5B-2 (Roughing valve stem guide holes) For machining centres

Operation : Bottom face

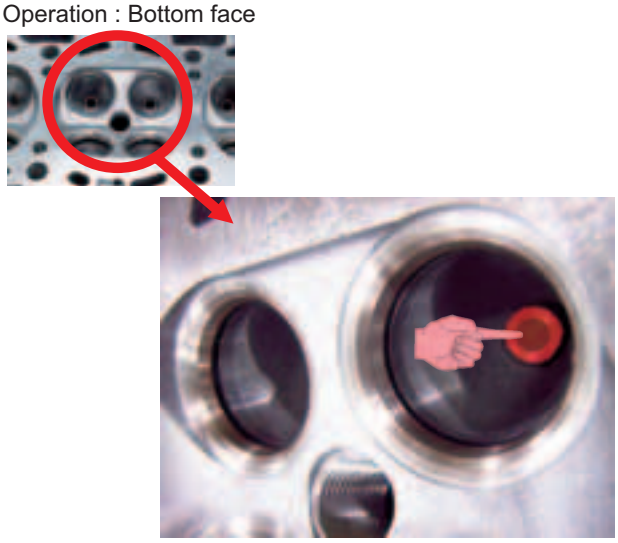

Specially designed for the Apollo cutter PCD cutting edge

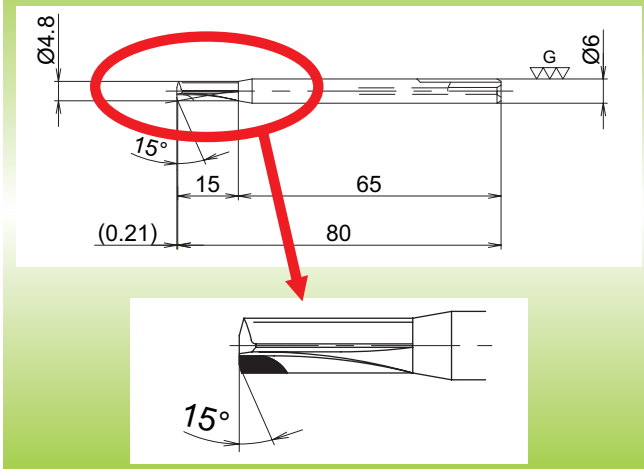

Tool features
Use of a PCD grade for higher hole accuracy and longer tool life than solid carbide reamers.

Cutting conditions
vc= 40–45m/min n=2,830–3,183min^{-1}
fr =0.12mm/rev ap=0.5mm/per side
Wet

Tooling Sheet 16

OP.5B-3 (Roughing of valve seat surfaces) For machining centres

Operation : Bottom face

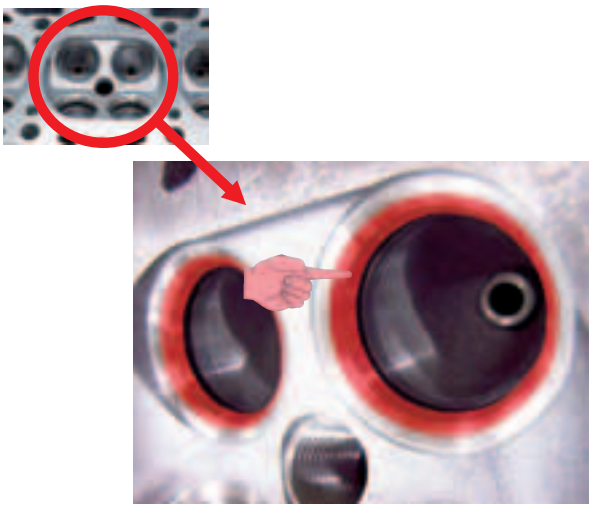

Specially designed for the Apollo cutter
CBN blade

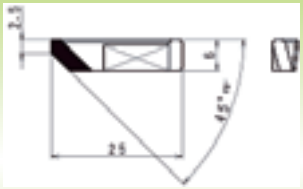

Tool features
Use of a CBN grade with a high wear resistance maintains machining accuracy. The grade is choosen according to work material (sintered material) type.

Cutting conditions
vc=112.2m/min n=1,500min^{-1} fr =0.12mm/rev
vf=180mm/min ap=0.5mm
Wet

Tooling Sheet 17

OP.6-1 (Finishing valve seat surfaces + stem guide holes) For machining centres

Operation : Bottom face

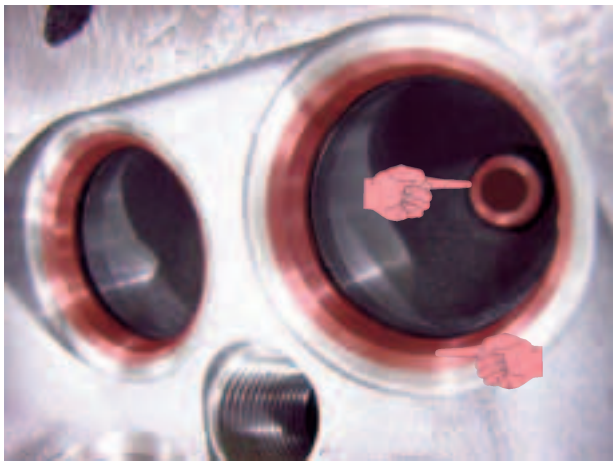

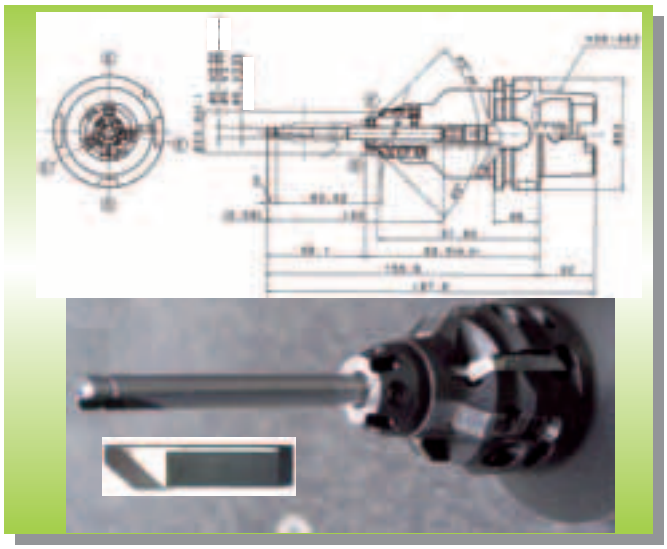

Tool features
Combined tool for finishing the stem guide holes and seat surfaces. With an adjustable positioning guide pad to prevent vibration caused by plunge cutting. Use of CBN blade with maximized rigidity + a solid carbide tool holder + a reamer with a PCD cutting edge.

Cutting conditions
vc=112.2m/min n=1,500min^{-1} fr =0.05mm/rev
vf= 75mm/min ap=0.1mm/per side
Wet

Tooling Sheet 18

OP.6-2 (Finishing valve stem guide holes) For machining centres

Operation : Bottom face

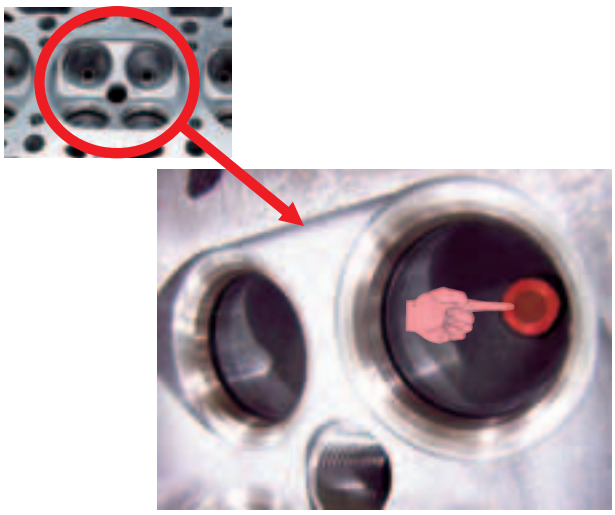

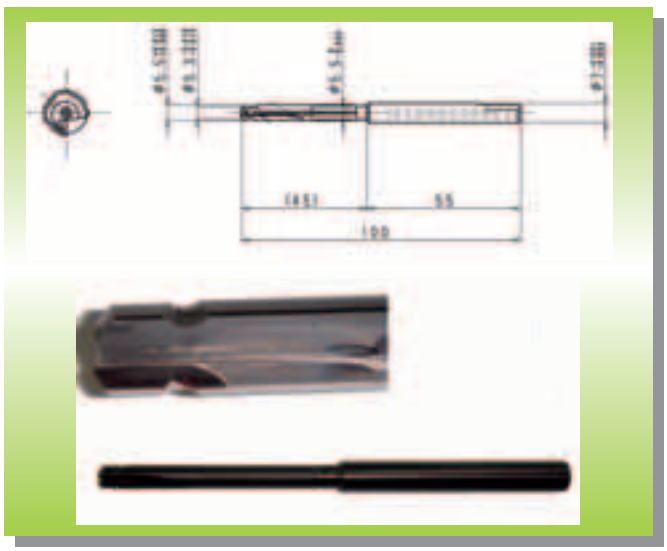

Tool features
Use of a pilot reamer with a leading edge reduces tool wandering. Use of a PCD grade enables cutting of the hard materials contained in sintered material. However, controlling the cutting conditions to prevent excessive cutting heat is necessary.

Cutting conditions
vc=40—45m/min n=2,320—2,600min^{-1}
fr = 0.1—0.15mm/rev
Wet

Tooling Sheet 19

OP.6-3 (Finishing valve seat surfaces) For machining centres

Operation : Bottom face

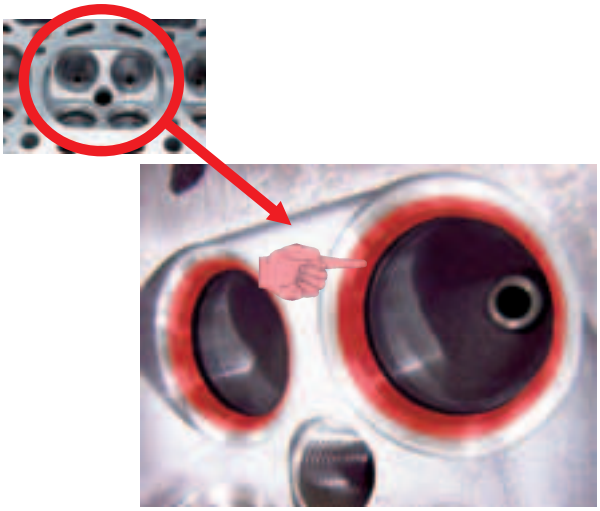

Specially designed for the Apollo cutter CBN blade

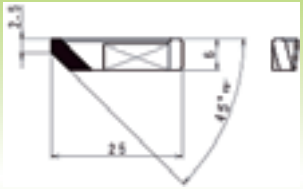

Tool features
Use of a CBN grade with a high wear resistance maintains machining accuracy. The grade is choosen according to work material (sintered material) type.

Cutting conditions
vc=112.2m/min n=1,500min^{-1} fr =0.12mm/rev
vf=180mm/min ap=0.5mm
Wet

Tooling Sheet 20

OP.7-1 (Roughing of cam bore half circles)

Operation : Top face

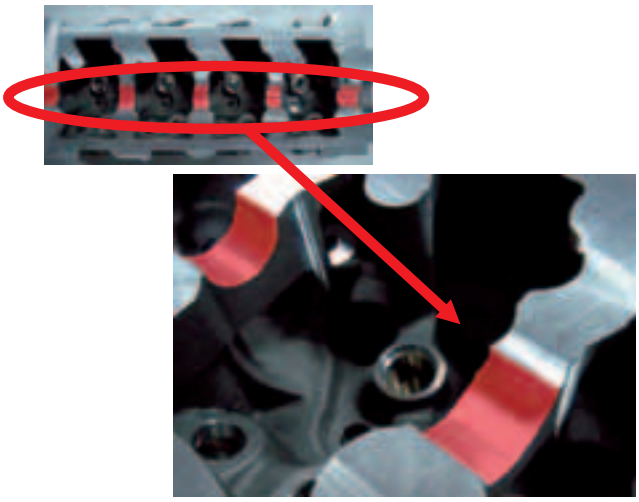

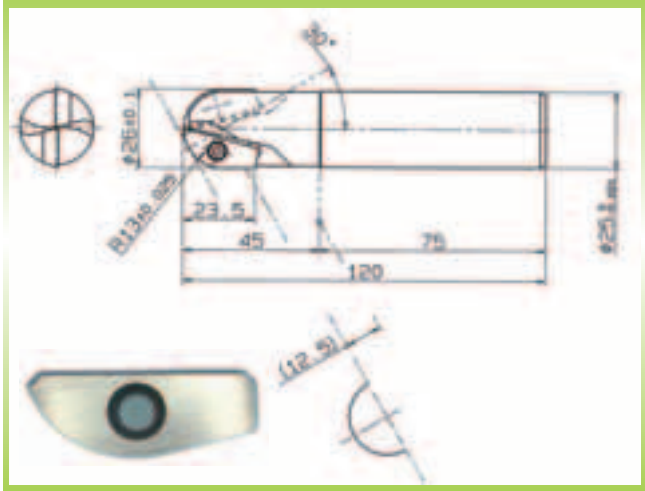

Tool features
Insert type ball nose end mill machines the cam bore half portions whilst the component clamped to a jig is tilted 30°. The elimination of machining with the centre cutting edge enables longer tool life.
Also suitable for special machines.

Cutting conditions
vc= 300m/min n=3,673min^{-1} fr =0.15mm/rev
vf=550mm/min ap=2.0mm
Wet

Tooling Sheet 21

OP.7-2 (Roughing of cam bore half circles)

Operation : Top face

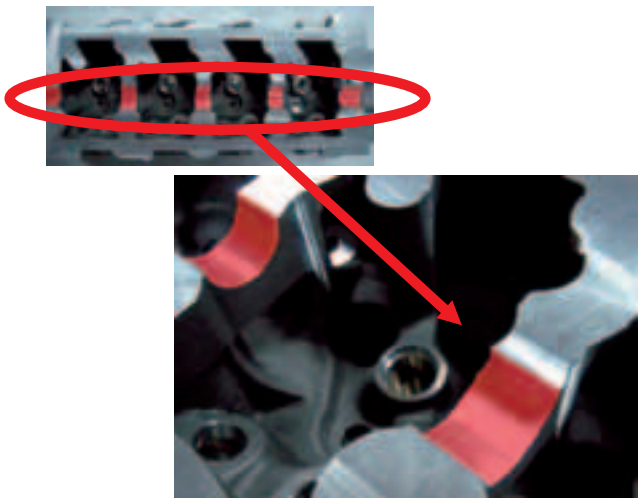

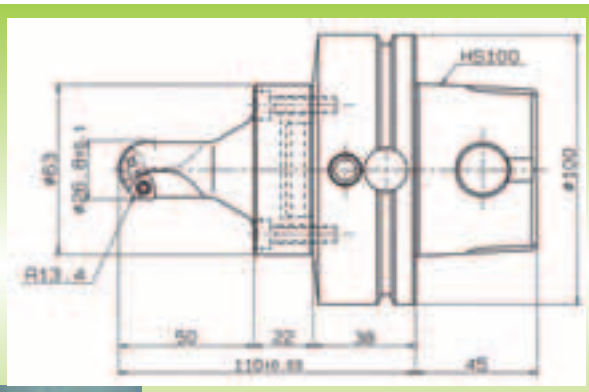

Tool features
Economical 3 cutting edge insert. Designed a with centre cutting edge, it makes the tool usable on special machines and machining centres.

Cutting conditions
vc=295m/min n=3,500min^{-1} fz=0.2mm/tooth
vf=700mm/min ap=2.0mm
Wet

Tooling Sheet 22

OP.7-3 (Roughing of cam bore half circles) For machining centres

Operation : Top face

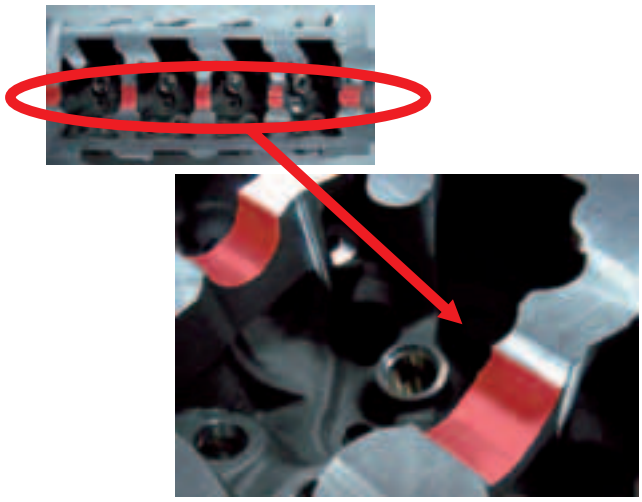

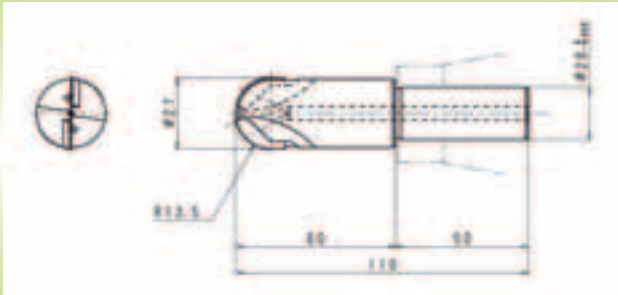

Tool features
Use of MD220 (PCD) inserts with high welding resistance. No material is left unremoved by tilting the shank and negates the need for a centre cutting edge. Internal coolant type.

Cutting conditions
vc=420m/min n=4,950min^{-1} fr =0.15mm/rev
Wet

Tooling Sheet 23

OP.8 (Recess boring of cam bearing housing) For machining centres

Operation : Top face

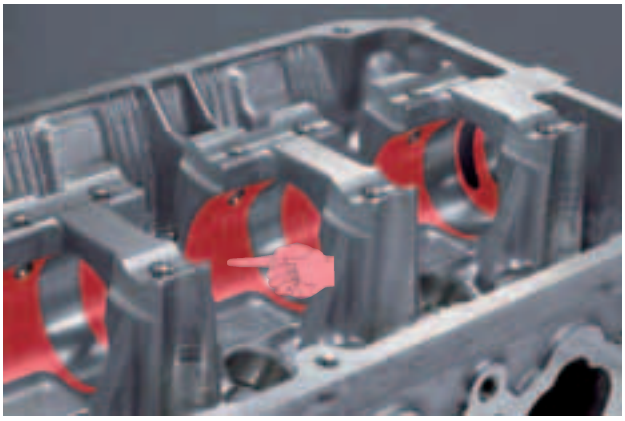

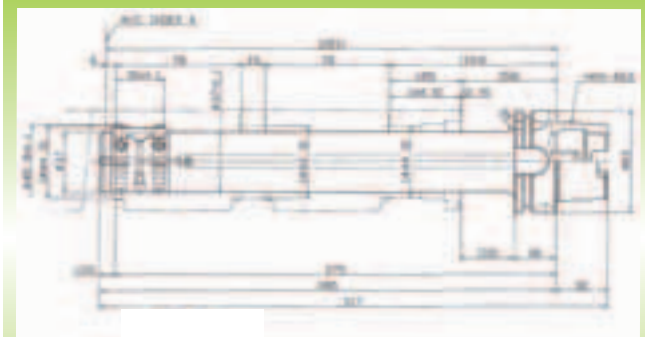

Tool features
Boring cutter for use on a machining centre for recessing cam bearing housings. Good dynamic balance with the boring bar section at the end.

Cutting conditions
vc=431m/min n=3,000min^{-1} fr=0.1mm/rev
ap=0.65mm
Wet

Tooling Sheet 24

OP.9 (Cam bearing housing thrust face) For machining centres

Operation : Top face

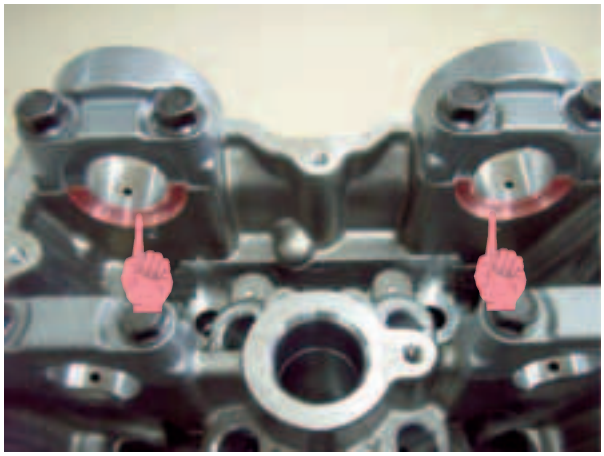

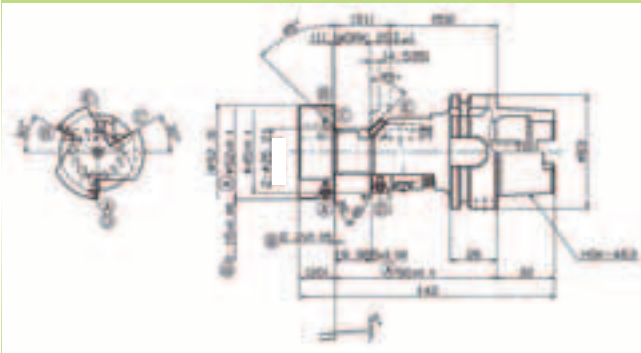

TPGX110304

Tool features
Fixed width milling cutter for machining cam bearing housing thrust faces for use on a machining centre. Inserts clamped directly to avoid interference. Cartridge type tool allowing width adjustment.

Cutting conditions
vc=294m/min n=1,800min^{-1} fr=0.1mm/rev
vf=180mm/min ap=0.3mm
Wet

Tooling Sheet 25

OP.10 (Rough machining of spark plug holes) For machining centres

Operation : Top face

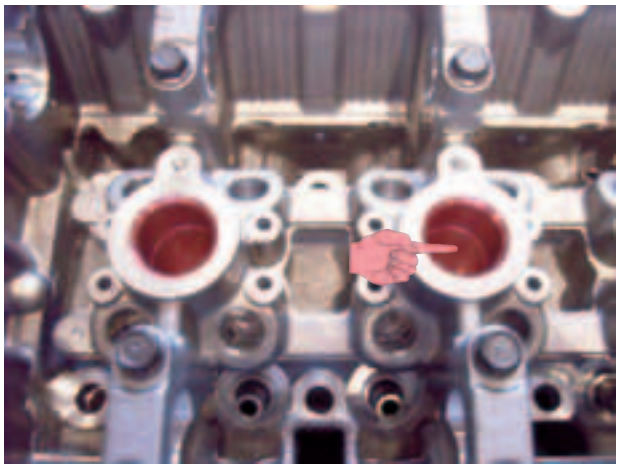

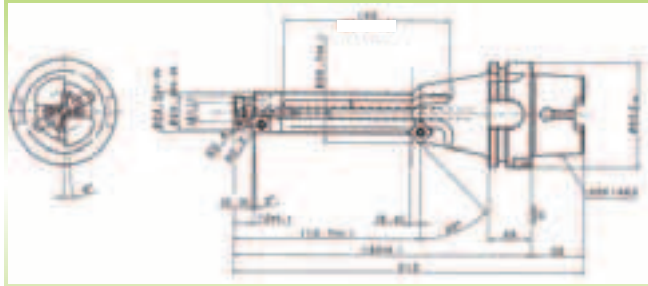

SPGX090304

Tool features
Combination tool for roughing spark plug holes. Cemented carbide guide pad prevents vibration. Good hole straightness leaves a constant finishing allowance.

Cutting conditions
vc=192m/min n=2,500min^{-1} fr =0.15mm/rev
vf=375mm/min ap=1.0mm/per side
Wet

Tooling Sheet 26

OP.11 (Valve spring seats) For machining centres

Operation : Top face

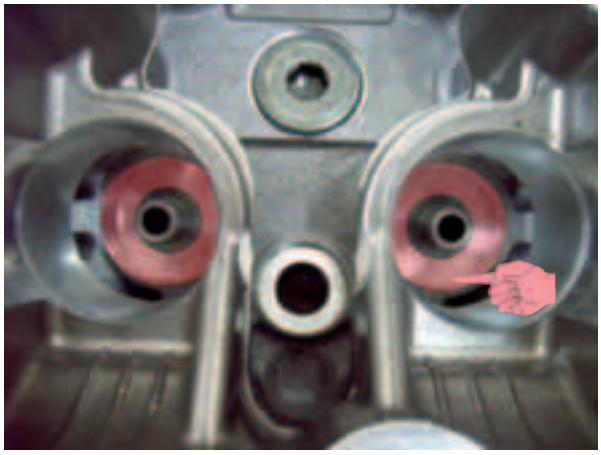

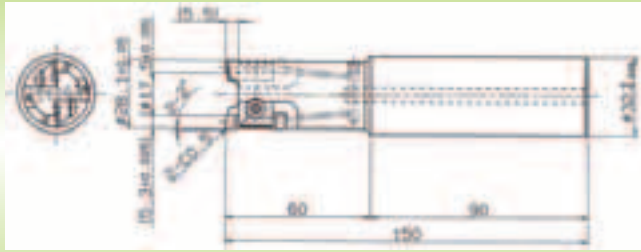

Tool features
End mill for machining valve spring seats with a single tool. V-shaped insert greatly increases insert positioning tolerance to achieve accurate machining with a good surface finish.

Cutting conditions
vc=220 / 353m/min n=4,000min^{-1} fr =0.075mm/rev
ap=2.0mm
Wet

Tooling Sheet 27

OP.12 (Finishing valve bucket holes) For machining centres

Operation : Top face

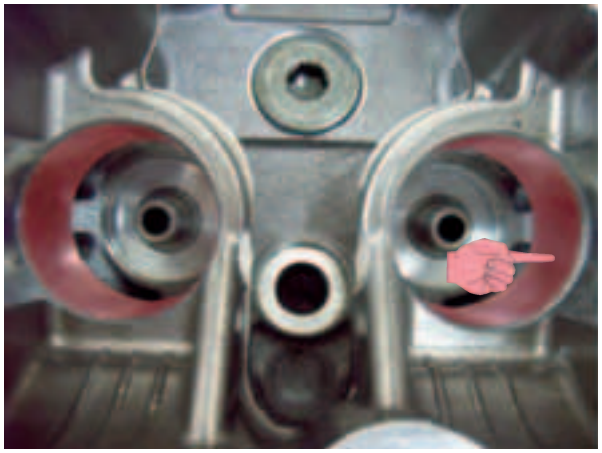

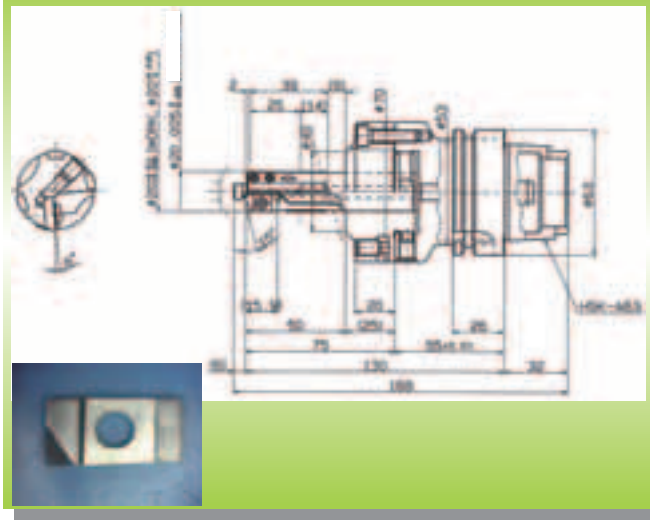

Tool features
Uses PCD inserts with a unique, adjustable cutting edge run-out function. Parts are clamped on a base of cemented carbide for accuracy and security. Insert type reamer enabling high-speed, high-accuracy machining.

Cutting conditions
vc=408m/min n=6,500min^{-1} fr =0.10mm/rev
vf=650mm/min ap=0.5mm/per side
Wet

Tooling Sheet 28

OP.13 (Finishing oil seal holes) For machining centres

Operation : Top face

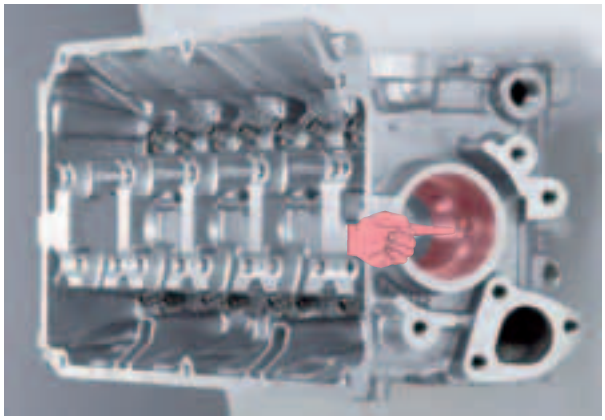

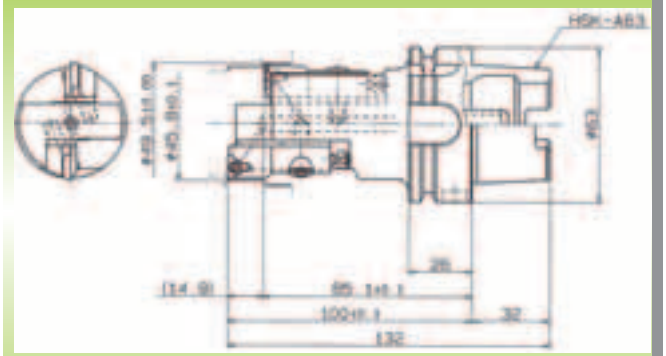

TPGX110304 HTi10

Tool features
Boring cutter for finishing the oil seal surfaces of cam bearing housings. Insert fitted on a cartridge with an adjustable cutting edge run-out function, allowing insert position and diameter adjustment. High positioning accuracy for good surface finishes.

Cutting conditions
vc=510.2m/min n=3,500min^{-1} fr =0.05mm/rev
vf=175mm/min ap=0.25mm/per side
Wet

Tooling Sheet 29

OP.14 (Finishing dowel location holes)

Operation : Bottom face

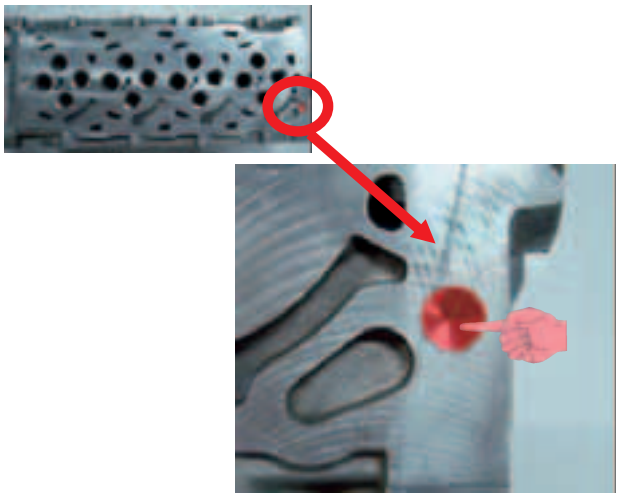

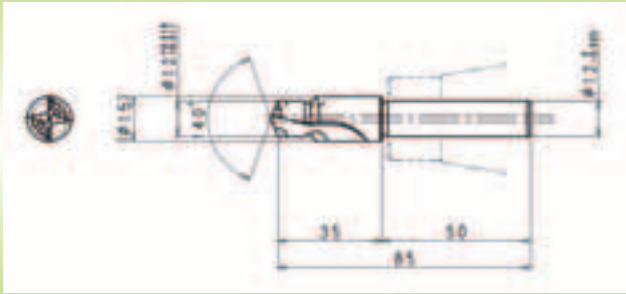

Tool features
Use of MD220 grade (PCD) cutting edge for high welding resistance. The 2-flute cutting edge with good chip disposal allows highly efficient machining. Shortening the tool length as much as possible achieves high run-out accuracy. Cutting edge design enables drilling of holes in cast iron with a single tool.

Cutting conditions
vc=376m/min n=8,000min^{-1} fr =0.2mm/rev
Wet

Tooling Sheet 30

OP.15 (Holes for valve guides)

Operation : Top face

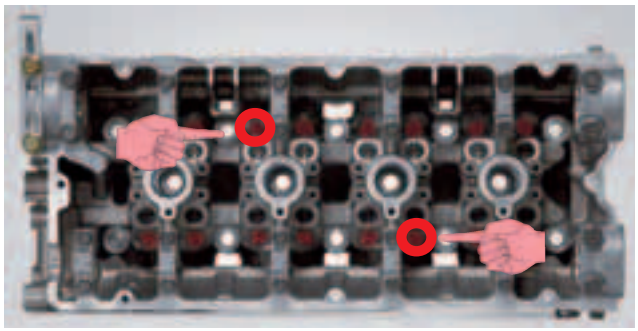

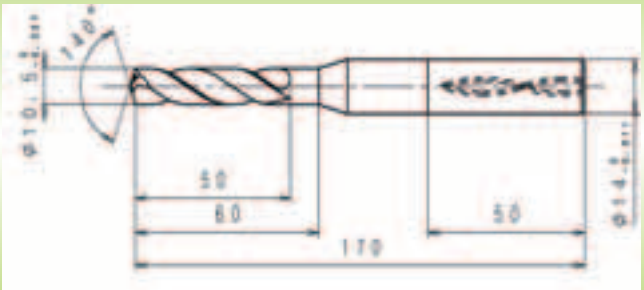

Tool features
Un-coated solid carbide drill for high welding resistance and enables high-speed, high-feed machining. Shank portion design with increased rigidity to balance accuracy and long tool life.
(Sharp edge, MZE / MZS drill cutting edge geometry)

Cutting conditions
vc=200m/min n=6,000min^{-1} fr =0.25mm/rev
Wet

Tooling Sheet 31

OP.16 (Valve seats) For machining centres

Operation : Bottom face

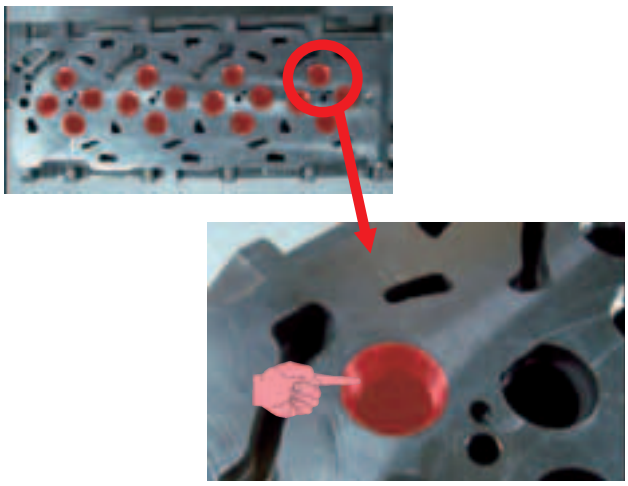

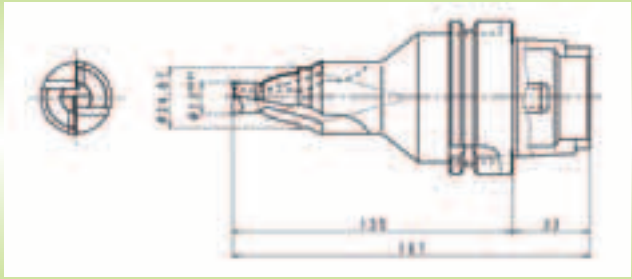

Tool features
Use of MD220 grade (PCD) cutting edge for high welding resistance. The 2-flute cutting edge with good chip disposal allows highly efficient machining. Suitable for integration with HSK shanks and can minimize cutting edge run-out during machining.

Cutting conditions
vc=938m/min n=12,000min^{-1} fr =0.4mm/rev
Wet

Tooling Sheet 32

OP.17 (Rough machining of spark plug holes) For machining centres

Operation : Top face

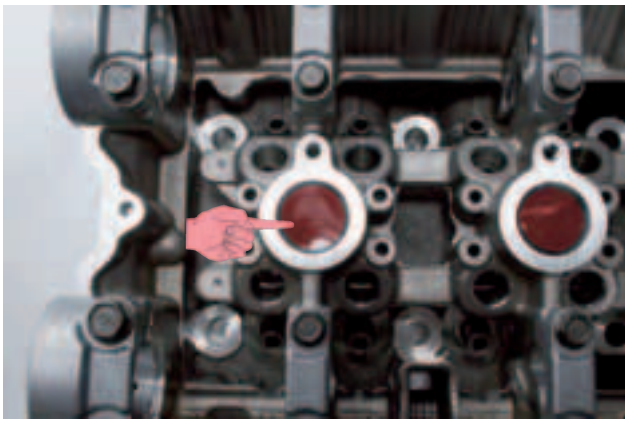

Tool features
For machining spark plug holes and prepares the holes for tapping with a single tool. A formed counter boring cutting edge allows cost reductions with process consolidation. Straight flute for easy regrinding. (Un-coated, solid carbide tool)

Cutting conditions
vc=350m/min n=4,600min^{-1} fr =0.30mm/rev
Wet

Tooling Sheet 33

OP.18 (Finishing spark plug holes)

Operation : Top face

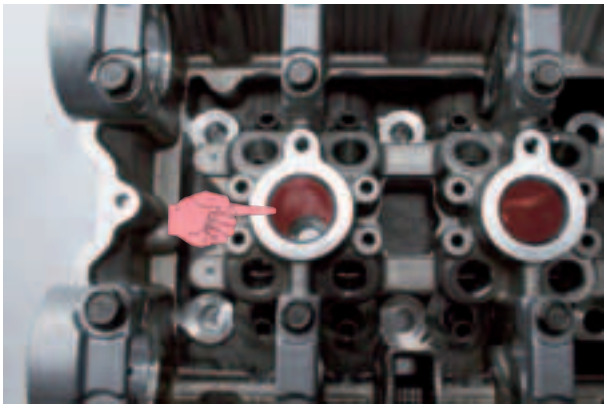

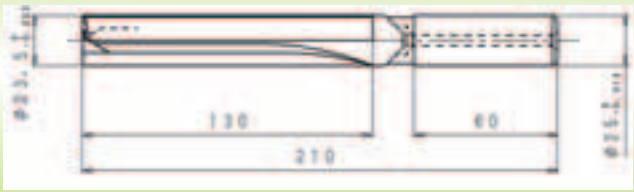

Tool features
Use of straight flute cutting edge shape suitable for machining cast holes enables high quality spot facing. (Un-coated, solid carbide tool)

Cutting conditions
vc=200m/min n=2,700min^{-1} fr =0.25mm/rev
Wet

Tooling Sheet 34

OP.19 (Spark plug holes)

Operation : Top face

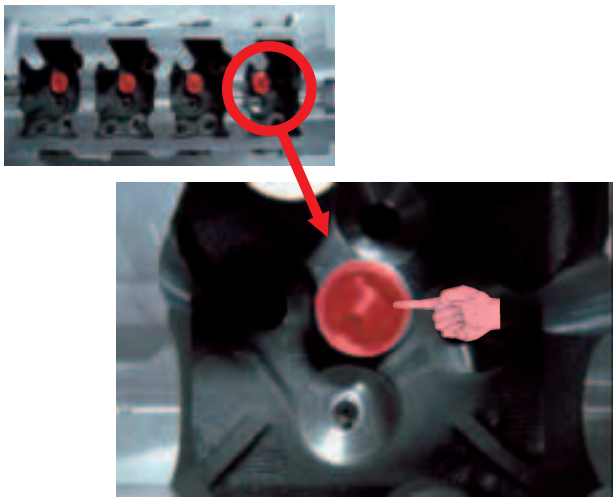

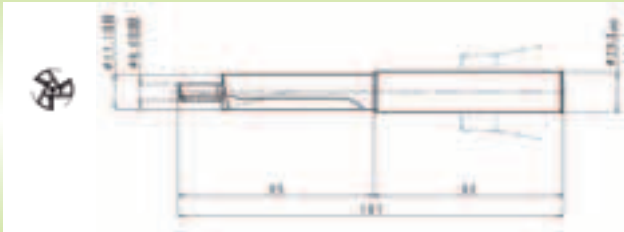

Tool features
Use of MD220 grade (PCD) cutting edge for high welding resistance. The 3-flute cutting edge with good chip disposal properties allows highly efficient machining.

Cutting conditions
vc=150m/min n=2,800min^{-1} fr =0.3mm/rev
Wet

Tooling Sheet 35

OP.20 (Head bolt holes)

Operation : Bottom face

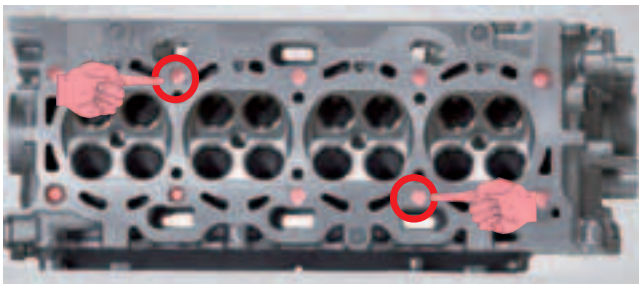

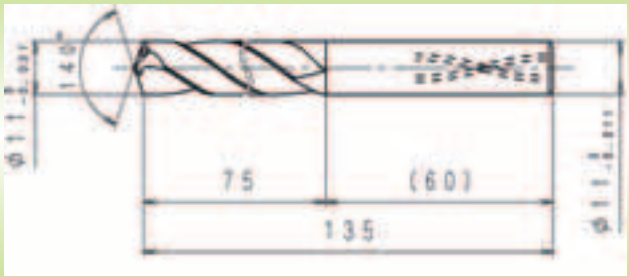

Tool features
Un-coated solid carbide drill for high-speed, high-feed machining. Use of a double margin balances high accuracy and long tool life.
(Uncoated MZE / MZS drill cutting edge geometry, sharp edge)

Cutting conditions
vc=150m/min n=4,350min^{-1} fr =0.30mm/rev
Wet

Tooling Sheet 36

OP.21 (Main gallery hole guide)

Operation : End faces

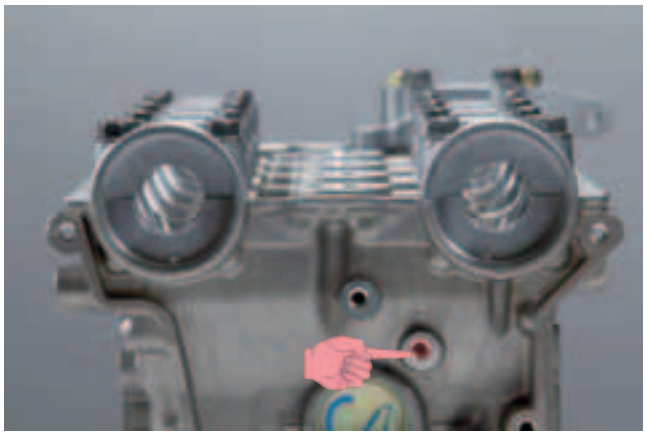

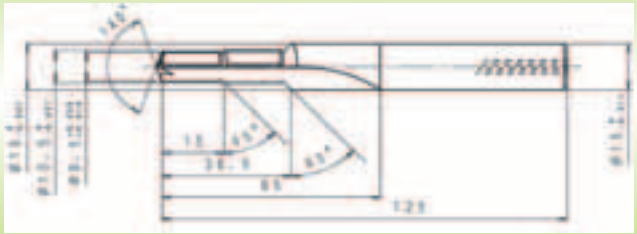

Tool features
Step drill consolidates processes and reduces machining costs. Enables machining of the pilot hole and chamfering with a single tool. Straight flute for easy regrinding.
(Solid carbide tool, straight flute)

Cutting conditions
vc=180m/min n=3,820min^{-1} fr =0.08mm/rev
Wet

Tooling Sheet 37

OP.22 (Main gallery hole)

Operation : End faces

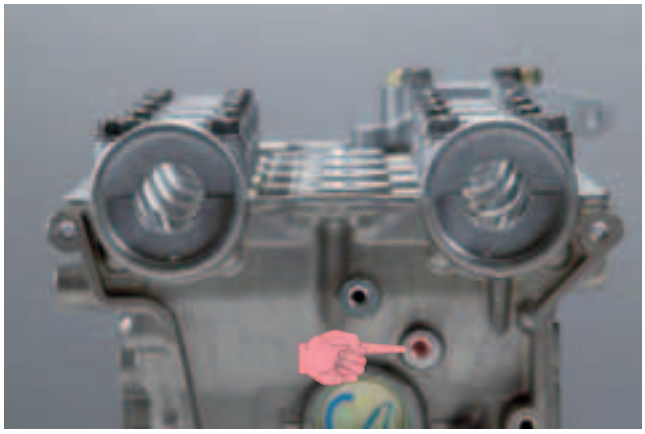

Tool features
MPS / MSL super long drill's cutting edge shape with good chip disposal. Enables burr free, high-quality deep hole drilling.

Cutting conditions
vc=120m/min n=4,000min^{-1} fr =0.15mm/rev
Wet

Tooling Sheet 38

OP.23 (Boss faces and pre drill holes for tapping)

Operation : Boss faces

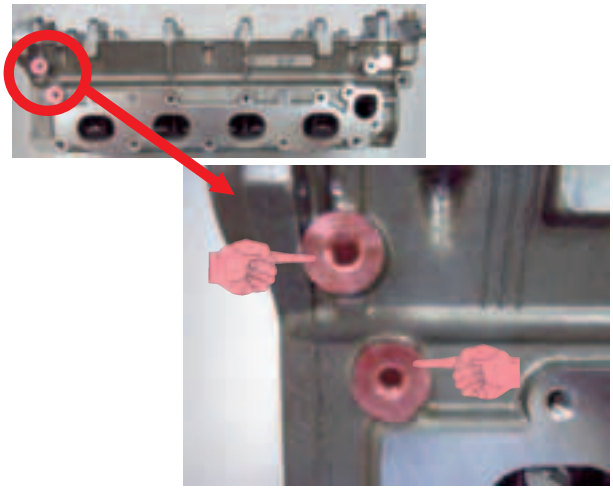

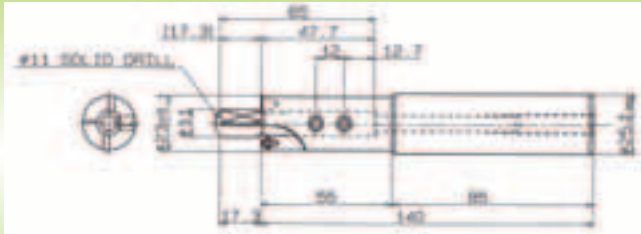

TPGX080208

Tool features
Combined tool that consolidates tap drilling and spot facing by using a solid drill fitted with an insert type boring bar. Process consolidation allows highly efficient machining.

Cutting conditions
vc=250m/min n=3,460min^{-1} fr =0.15mm/rev
ap=2.5mm
Wet

Tooling Sheet 39

OP.24-1 (Holes tap drilled before threading) : M8

Operation : Manifold holes

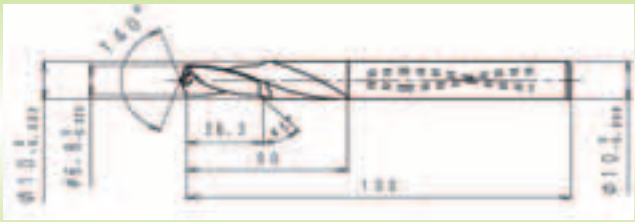

Tool features
Step drill consolidates processes and reduces machining costs.
(Uncoated MZE / MZS drill cutting edge geometry with a sharp edge)

Cutting conditions
vc=150m/min n=4,770min^{-1} fr =0.20mm/rev
vf=800mm/min
Wet

Tooling Sheet 40

OP.24-2 (Holes tap drilled before threading) : M10

Operation : Manifold holes

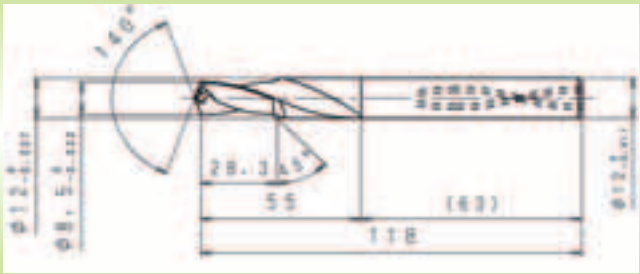

Tool features
Step drill consolidates processes and reduces machining costs.
(Uncoated MZE / MZS drill cutting edge geometry with a sharp edge)

Cutting conditions
vc=150m/min n=4,000min^{-1} fr =0.20mm/rev
vf=800mm/min
Wet

Tooling Sheet 41

OP.25 (Drilling)

Operation : Manifold holes

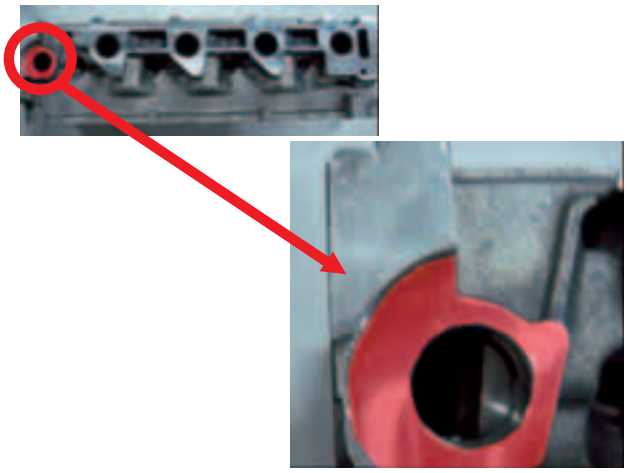

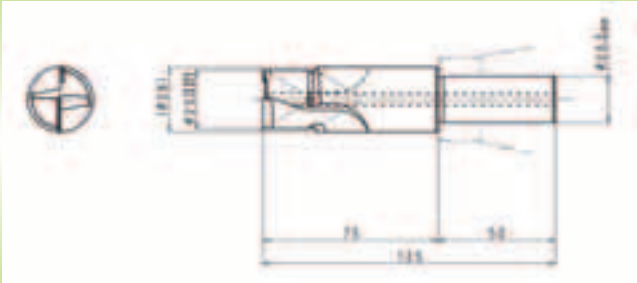

Tool features
Use of MD220 grade (PCD) cutting edge for high welding resistance. The 2-flute cutting edge with good chip disposal enables highly efficient machining. Shortening the tool length as much as possible achieves high run-out accuracy.

Cutting conditions
vc=296m/min n=3,800min^{-1} fr =0.3mm/rev
Wet

Tooling Sheet 42

OP.26 (Drilling)

Operation : Holes

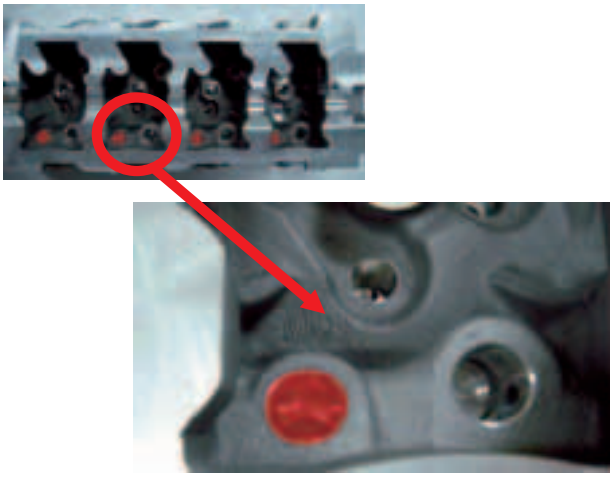

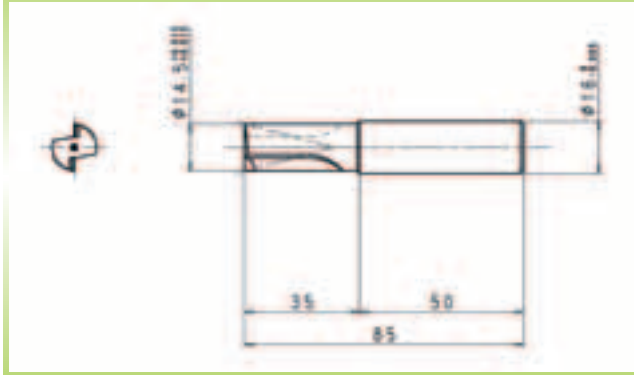

Tool features
Use of MD220 grade (PCD) cutting edge for high welding resistance. The 2-flute cutting edge with good chip disposal enables highly accurate machining.

Cutting conditions
vc=350m/min n=7,700min^{-1} fr =0.2mm/rev
Wet

Tooling Sheet 43

Cylinder block

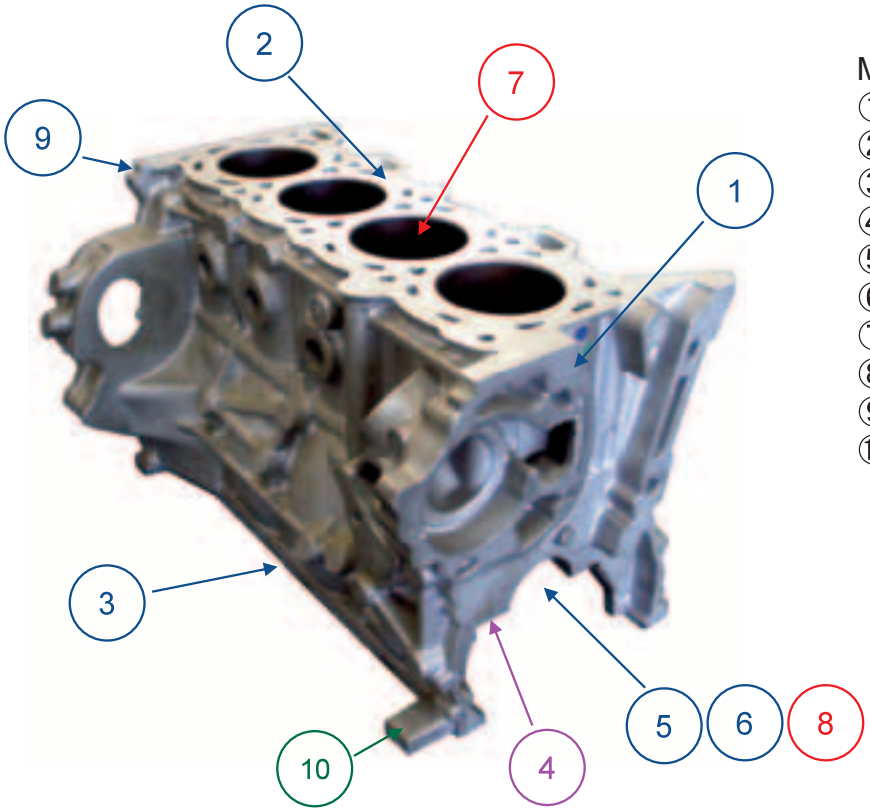

Main machining
① End faces
② Top face
③ Bottom face (Oil pump surface)
④ Bearing cap seat
⑤ Crank journal half circle
⑥ Journal width
⑦ Cylinder bore
⑧ Crank hole (After cap installation)
⑨ Datum surface
⑩ Datum hole

Machining methods
Boring
Milling
Drilling
Broach(Bearing cap seat)

OP.1A (Boss face) For machining centres

Operation : Gasket and boss faces

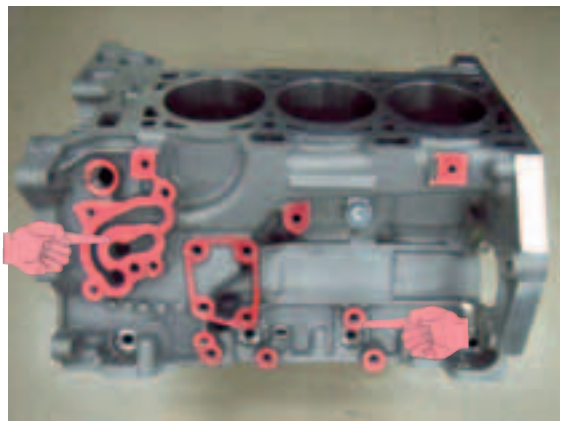

Work material : AL

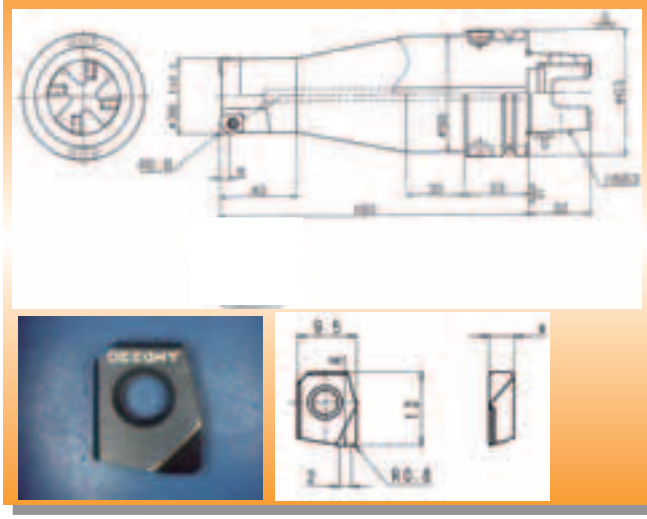

Tool features
Cutter to machine boss surfaces on a machining centre. Standard inserts with PCD grade inserts for face milling. (V10000) cutter for high speed finishing of aluminium.

Cutting conditions
vc=950m/min n=7,940min^{-1} fz=0.19mm/tooth
vf=5,955mm/min ap=2.0－3.0mm
Wet

Tooling Sheet 1

OP.1B (Boss face)

Operation : Boss faces

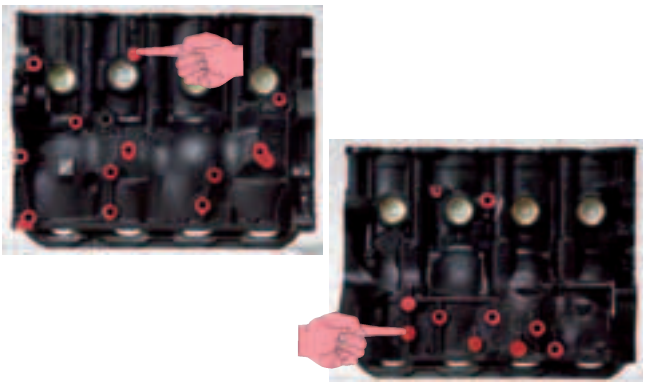

Work material : FC

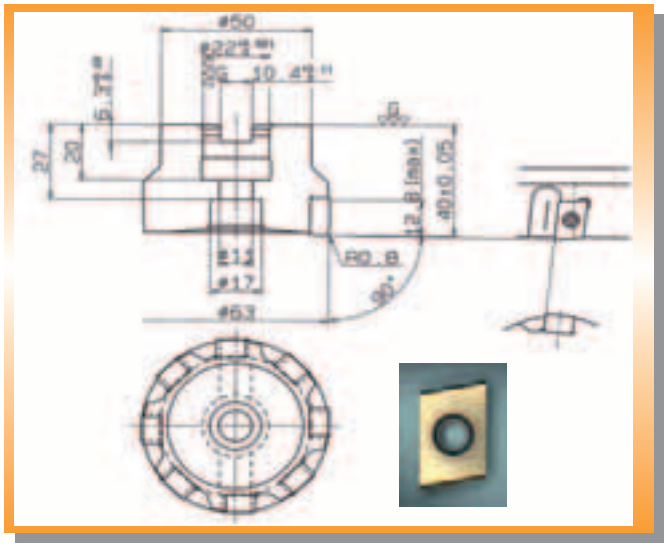

Tool features
On edge type insert shoulder cutter for machining FC material boss surfaces. Use of a multi-insert type Ø63 with cutter 8 teeth for high feed rates.

Cutting conditions
vc=125m/min n=631min^{-1} fz=0.22mm/tooth
vf=1,110mm/min ap=2.0－3.0mm
Wet

Tooling Sheet 2

OP.2 (Datum surface for reference)

Operation : Datum face

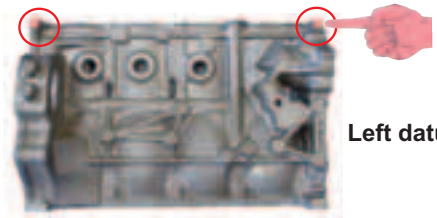

Left datum face

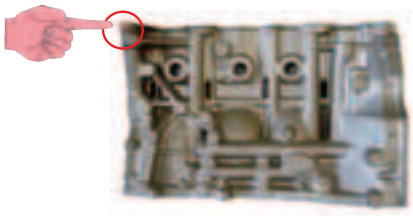

Right datum face

Work material : AL

Tool features
Standard, finish milling cutter for high speed machining, using MD220 grade (PCD) inserts for high wear and welding resistance. 90° corner angle is suitable for machining each datum face.

Cutting conditions
vc=1,000－4,500m/min fz=0.05－0.20mm/tooth
ap=0.3－2.0mm
Dry

Tooling Sheet 3

OP.3 (Roughing)

Operation : Top and bottom face

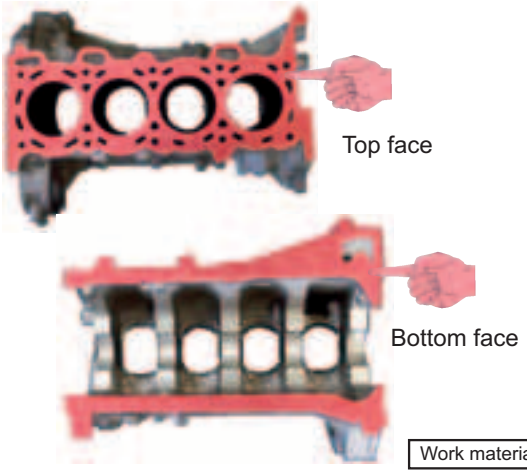

Work material : AL

NR10000

Tool features
Standard, rough milling cutter for high speed machining, using MD220 grade (PCD) inserts for high wear and welding resistance. Chamfer honed main cutting edges increases cutting edge strength.

Cutting conditions
vc=1,000－4,500m/min fz=0.05－0.30mm/tooth
ap=0.3－3.5mm
Dry

Tooling Sheet 4

OP.4 (Roughing the top face)

Operation : Top face

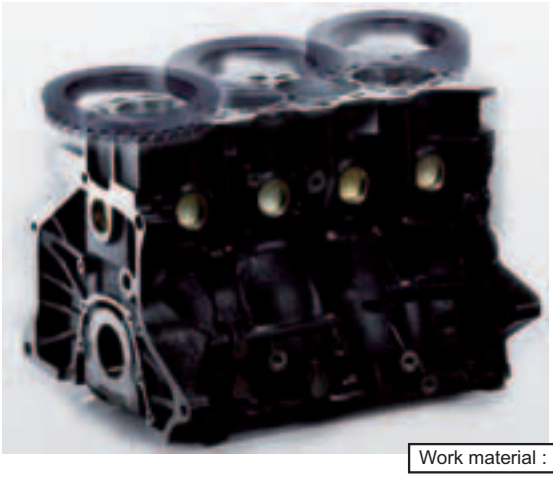

Work material : FC

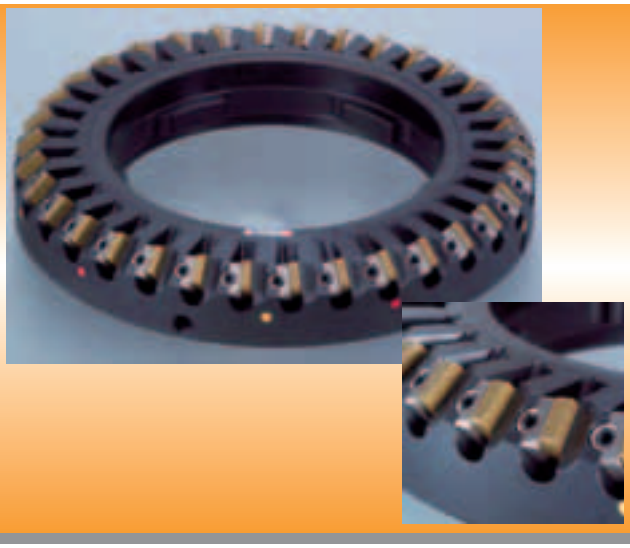

Tool features
Face milling cutter for roughing FC material that enables high feed machining with a multi-insert design. Insert corner angle of 45° prevents workpiece chipping. Use of a single bolt mounting (QFB) for cutter installation allows quick tool change.

Cutting conditions
vc=118m/min n=150min^{-1} fz=0.22mm/tooth
vf=1,100mm/min ap=3.0mm
Dry

Tooling Sheet 5

OP.5A (Crank bearing journal half circle)

Operation : Bottom face

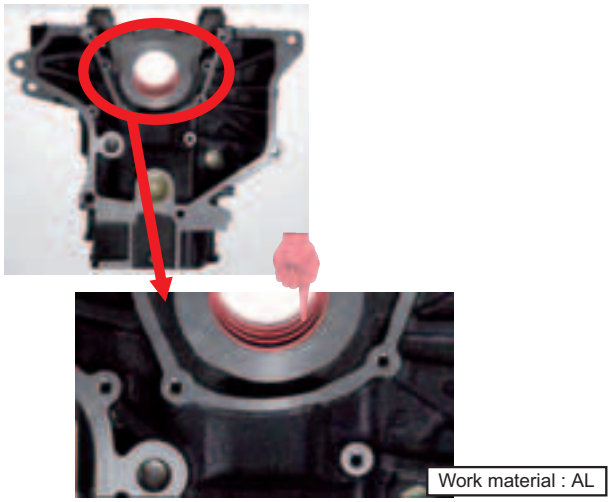

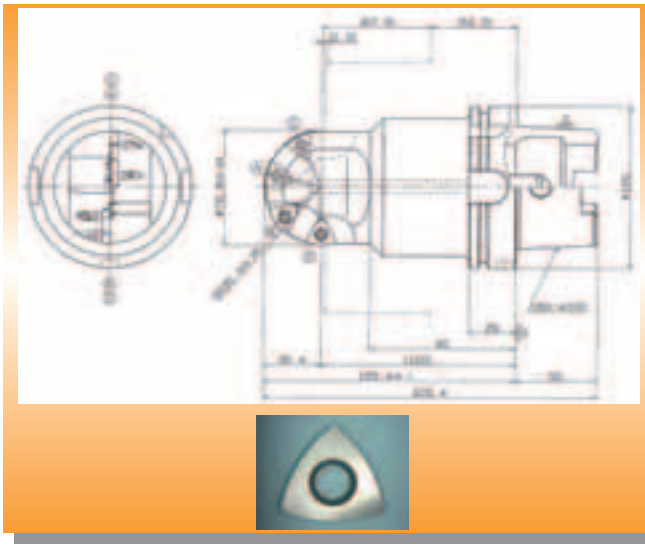

Tool features
3 cutting edge type inserts. With a centre cutting edge and through air & coolant holes to improve chip evacuation. For use on both special machines and machining centres.

Cutting conditions
vc=400m/min n=1,800min^{-1} fz=0.34mm/tooth
vf=612mm/min ap=3.0mm
Wet

Tooling Sheet 6

OP.5B (Crank bearing journal half circle) For special machines

Operation : End face

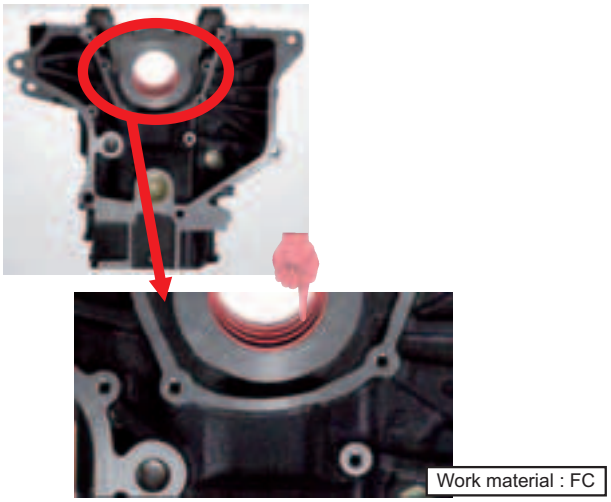

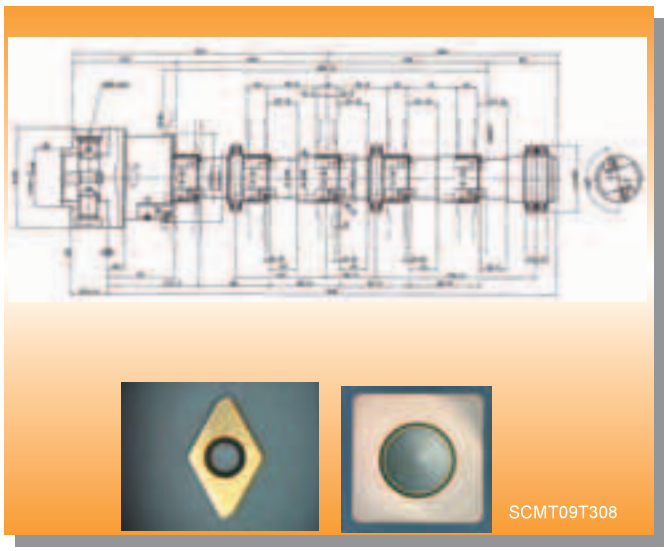

Tool features
Boring bar to single stage machine on special machines. Support between the end and middle portions minimizes run-out. Use of ABS quick change system allows quick tool change.

Cutting conditions
vc=53 / 100m/min n=300min^{-1} fz=0.30mm/tooth
vf=90mm/min ap=2.2mm/per side
Wet

Tooling Sheet 7

OP.6 (Semi-finishing crank bearing jounal) For machining centres

Operation : Bottom face

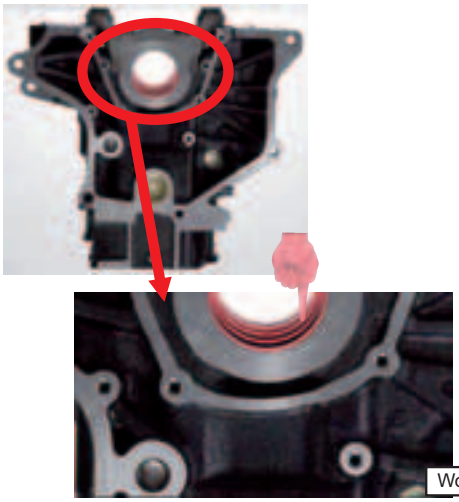

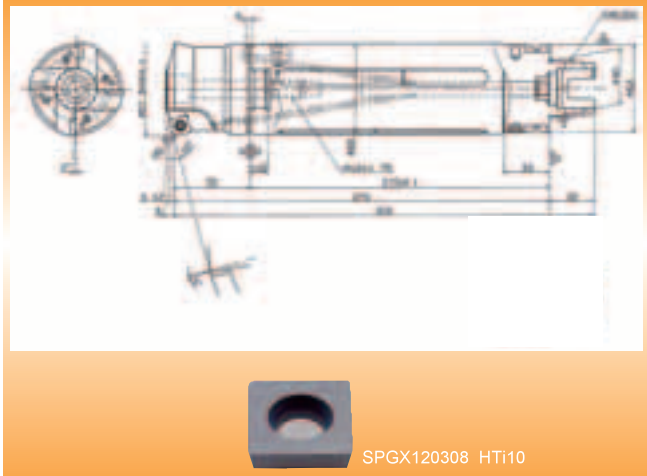

SPGX120308 HTi10

Tool features
Machining using a machining centre capable of 180° rotation. With a cemented carbide pad to prevent deflection and torsion occurring during cutting, thereby increasing accuracy.

Cutting conditions
vc=400m/min n=1,875min^{-1} fz=0.15mm/tooth
vf=1,125mm/min ap=0.2mm/per side
Wet

Tooling Sheet 8

OP.7A (Roughing bearing cap face) For special machines

Operation : Bottom face

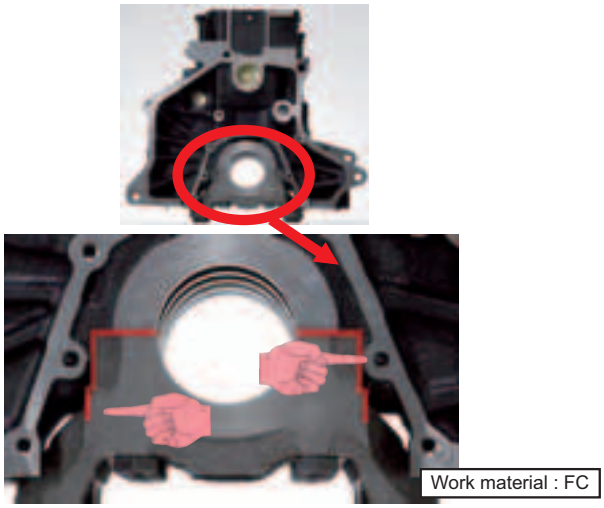

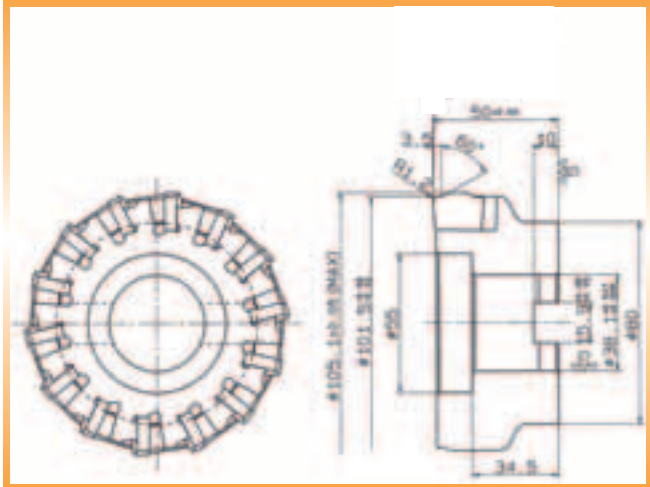

Tool features
Used for roughing the bearing cap face and crank case. Specially formed inserts also enable chamfering. Use of multi-insert type cutter and wedge clamp for higher feeds.
(Ø101.5 : Number of teeth=14)

Cutting conditions
vc=150m/min n=470min^{-1} fz=0.22mm/tooth
vf=1,450mm/min ap=2.5mm
Wet

Tooling Sheet 9

OP.7B (Roughing bearing cap face) For machining centres

Operation : Bottom face

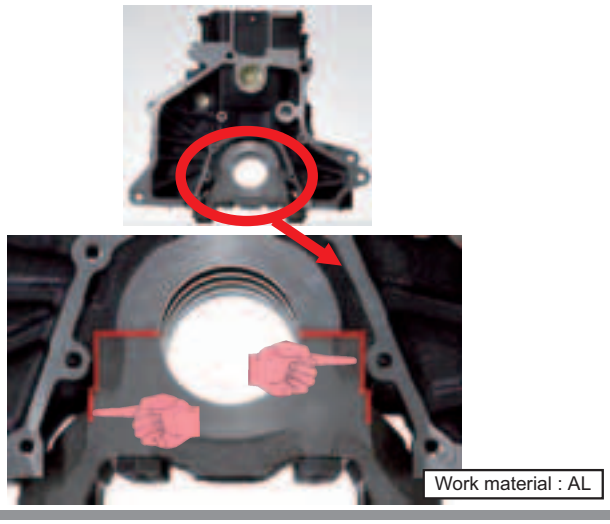

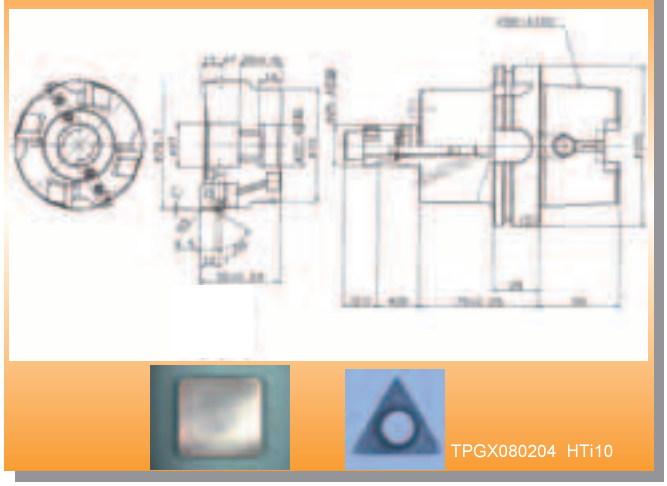

Tool features
Used for roughing the bearing cap face and crank case on a machining centre. For machining the width + bottom face the inserts are wedge clamped, while for chamfering the hole diameter a round insert type tool holder is used, enabling machining with a single tool.

Cutting conditions
vc=700m/min n=2,786min^{-1} fr =0.80mm/rev
vf=2,229mm/min ap=2.3mm
Wet

Tooling Sheet 10

OP.8 (Finishing the bearing cap face) For machining centres

Operation : Bottom face

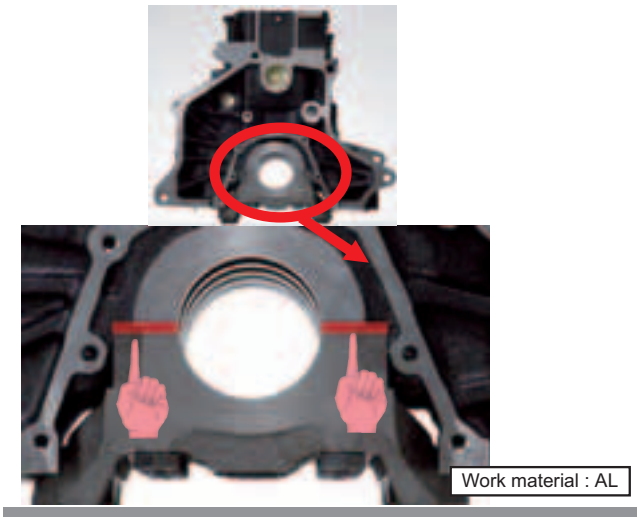

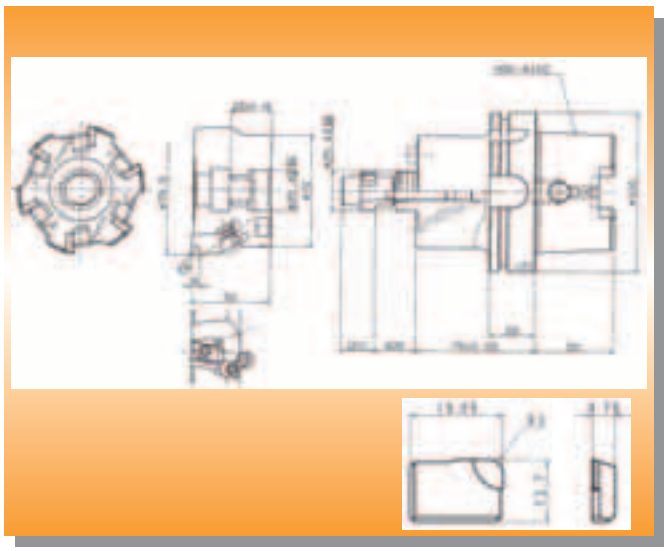

Tool features
Used for finishing the bearing cap face on a machining centre. AF5000 cutter using inserts with an adjustable cutting edge run-out function for increased accuracy of the minor cutting edge.

Cutting conditions
vc=1,131m/min n=4,500min^{-1} fz=0.13mm/tooth
vf=3,600mm/min ap=0.3mm
Wet

Tooling Sheet 11

OP.9 (Finishing the crank case bearing cap width) For machining centres

Operation : Bottom face

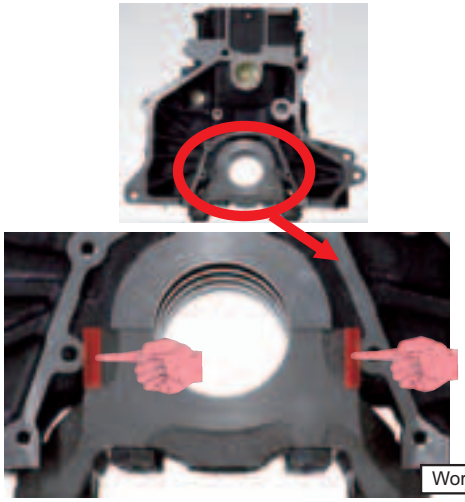

Work material : AL

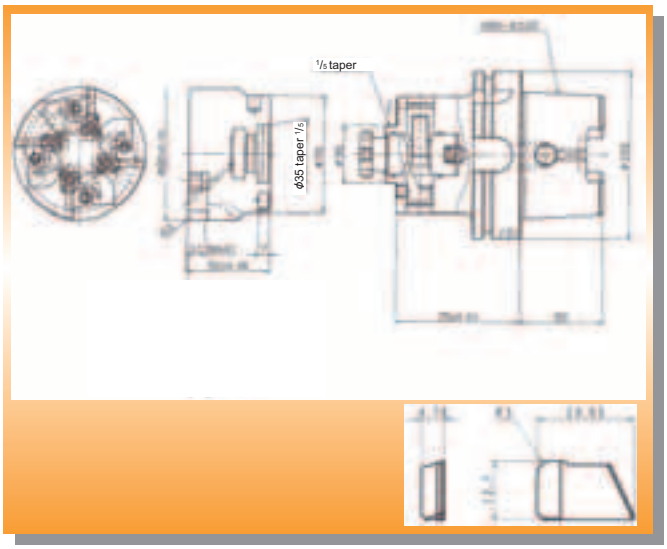

Tool features
Used for finishing the bearing cap crank case on a machining centre. Cutter with an adjustable cutting edge run-out function, increasing run-out accuracy in the outer diameter direction. Use of mounting-teeth, taper type quick change (QB4000) increases clamping rigidity and achieves high installation repeatability accuracy.

Cutting conditions
vc=1,131m/min n=4,500min^{-1} fz=0.12mm/tooth
vf=2,160mm/min ap=0.15mm
Wet

Tooling Sheet 12

OP.10A (Determining the bearing journal width) For special machines

Operation : Bottom face

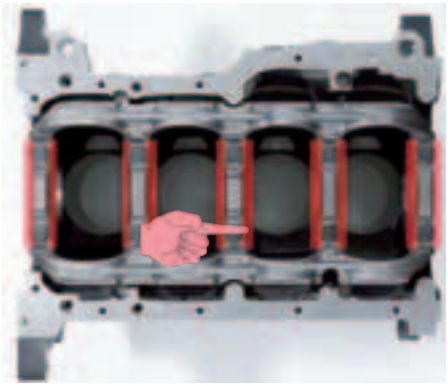

Work material : FC

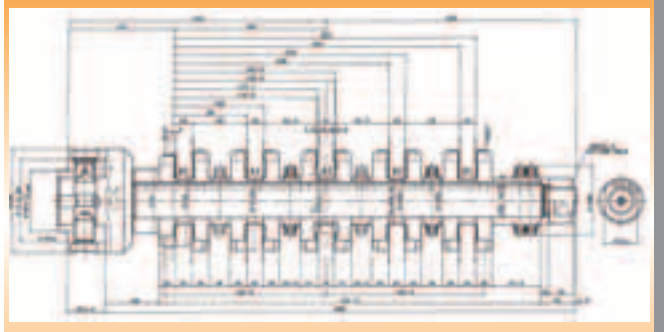

Wedge clamp

Tool features
Arbor type side and face cutter to machine with a single tool on a special machine. Supported on each journal to minimize flexing occurring during cutting. Use of ABS quick change system enables a quick tool change.

Cutting conditions
vc=60 / 91m/min n=250min^{-1} fr=0.90mm/rev
vf=225mm/min ap=2.0mm
Wet

Tooling Sheet 13

OP.10B (Determining the bearing journal width) For special machines

Operation : Bottom face

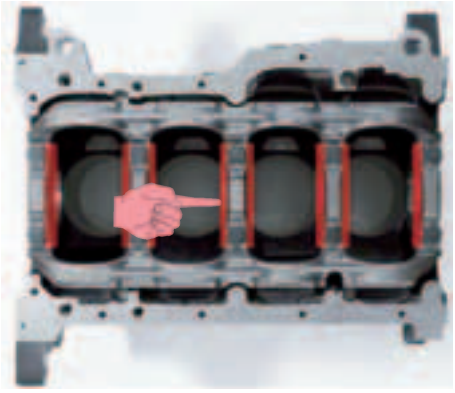

Work material : FC

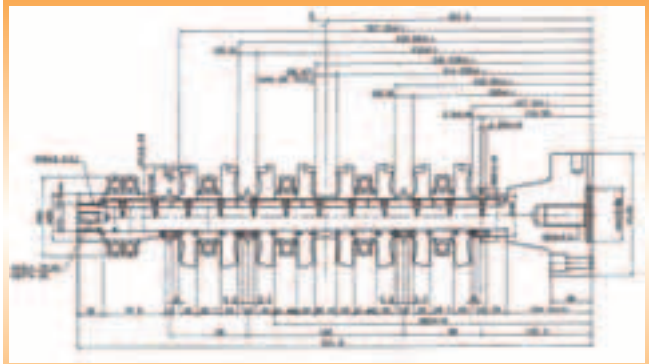

On edge insert type, screw lock

Tool features
Arbor type side and face cutter to machine with a single tool on a special machine. Supported on each journal to minimize flexing during cutting. The side and face cutter uses on edge type inserts. The metal slitting saw for machining oil grooves is placed between each cutter.

Cutting conditions
vc=82m/min n=250min^{-1} fr=1.2mm/rev
vf=300mm/min ap=2.0mm
Wet

Tooling Sheet 14

OP.10C (Determining the bearing journal width) For machining centres

Operation : Bottom face

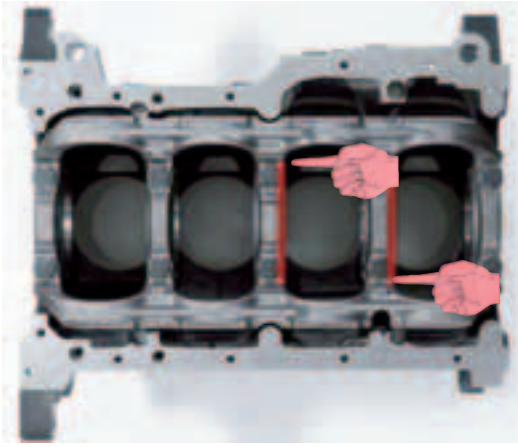

Work material : AL

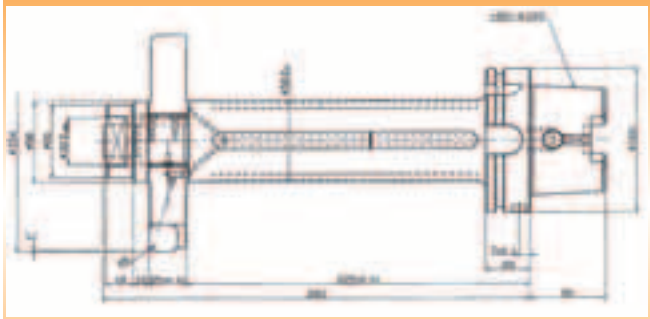

Tool features
Machining using a machining centre capable of 180° rotation. With a cemented carbide pad to prevent flexing during cutting, thereby increasing accuracy.

Cutting conditions
vc=250m/min n=516min^{-1} fr=1.2mm/rev
vf=619mm/min ap=2.5mm
Dry / Wet

Tooling Sheet 15

OP.10D (Determining the bearing journal width) For machining centres

Operation : Bottom face

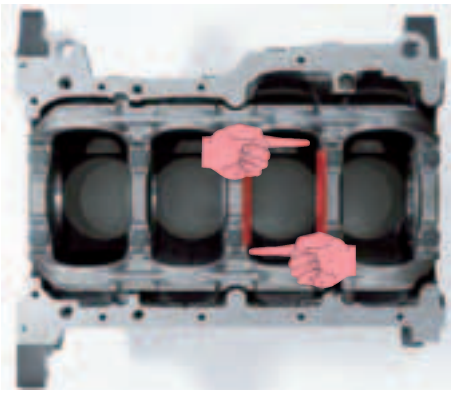

Work material : FC

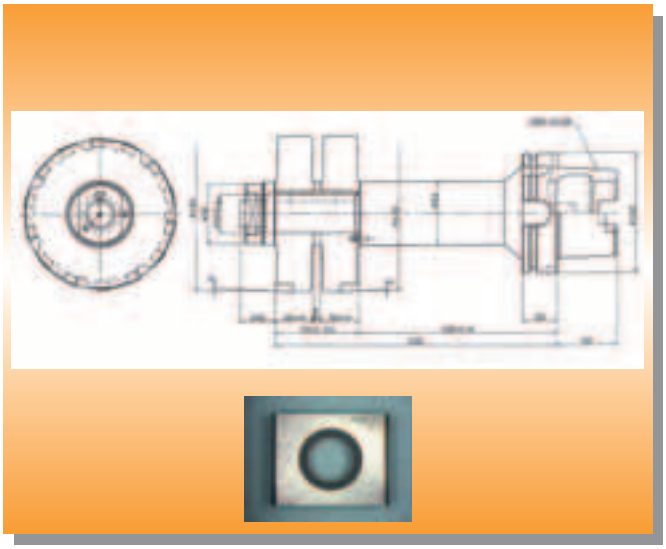

Tool features
Machining using a machining centre capable of 180° rotation. Side cutter with on edge type inserts increases cutting edge strength, thereby preventing chipping.

Cutting conditions
vc=100m/min n=245min^{-1} fr =1.1mm/rev
vf=269mm/min ap=2.5mm
Wet

Tooling Sheet 16

OP.11 (Finishing end faces)

Operation : End faces

Front face **Back face**

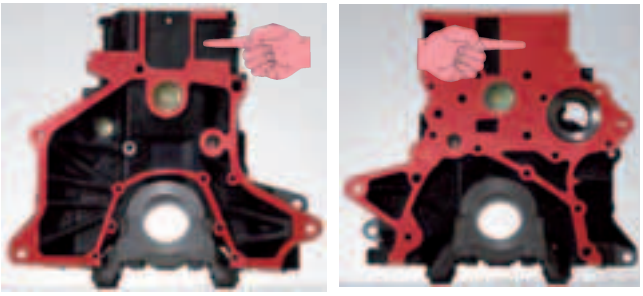

Work material : FC

Tool features
Face milling cutter for finishing that is capable of high feed machining with a multi-insert design. Use of single bolt mounting (QFB) for quick tool change. Inserts can be reground.

Cutting conditions
vc=109m/min n=110min^{-1} fz=0.1mm/tooth
vf=396mm/min ap=0.5mm
Dry

Tooling Sheet 17

OP.12 (Semi-finishing the centre journal thrust face) For machining centres

Operation : Bottom face

Work material : AL

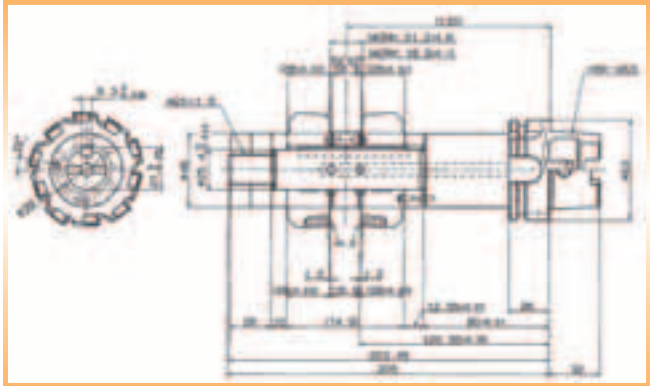

Tool features
Used for semi-finishing the centre journal thrust face on a machining centre. Two-tiered, on edge type inserts for a large machining allowance and to prevent vibration.

Cutting conditions
vc=500m/min n=2,217min^{-1} fz=0.24mm/tooth
vf=532mm/min ap=1.2mm
Wet

Tooling Sheet 18

OP.13A (Finishing the centre journal thrust face) For machining centres

Operation : Bottom face

Work material : AL

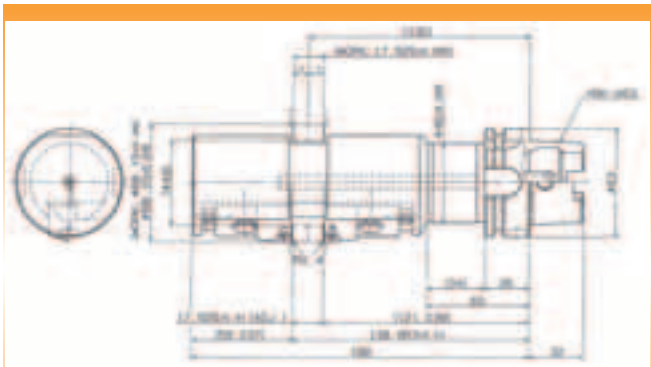

TPGX110304

Tool features
Finishes the centre journal thrust face on a machining centre. Cartridge with adjustable cutting edge run-out function for precision finishing.

Cutting conditions
vc=500m/min n=2,347min^{-1} fr =0.08mm/rev
vf=188mm/min ap=0.5mm
Wet

Tooling Sheet 19

OP.13B (Finishing the centre journal thrust face) For special machines

Operation : Bottom face

Work material : AL

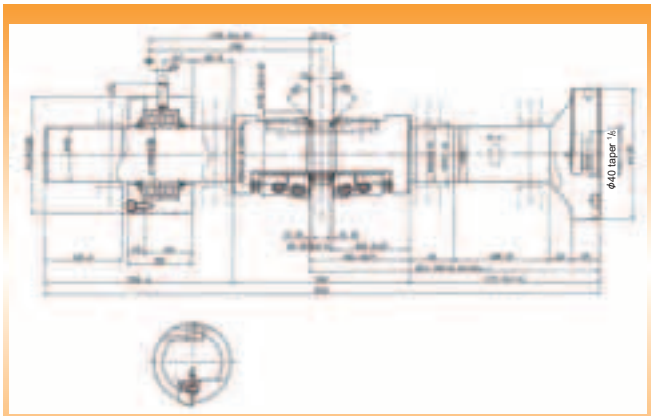

Tool features
Used for finishing the centre journal thrust face on a special machine. Uses a cartridge with an adjustable cutting edge run-out function when finishing the width and chamfering both sides. Use of a mounting-teeth taper type (QB4000) increases clamping rigidity and achieves high installation repeatability accuracy.

Cutting conditions
vc=368m/min n=1,500min^{-1} fr =0.10mm/rev
vf=150mm/min ap=0.3mm
Wet

Tooling Sheet 20

OP.14A (Crank bearing housing oil grooves) For special machines

Operation : Bottom face

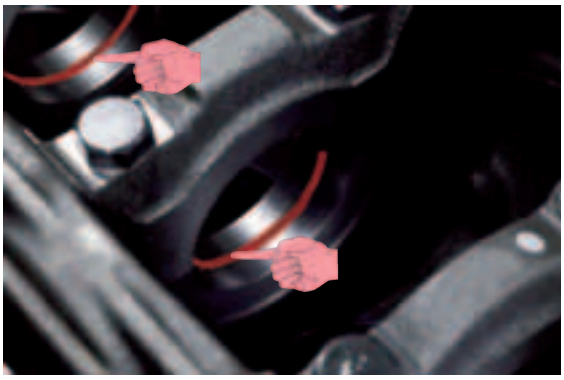

Work material : FC

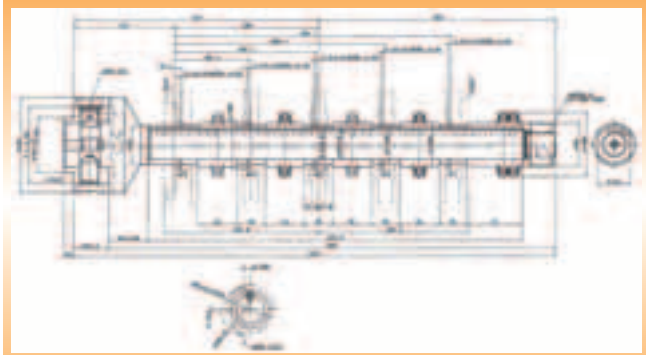

Tool features
Arbor type metal slitting saw for use on a special machine. Supported on each journal to minimize flexing during cutting. Use of ABS quick change system for a quick tool change.

Cutting conditions
vc=47m/min n=250min^{-1} fr =0.80mm/rev
vf=200mm/min ap=1.7mm
Wet

Tooling Sheet 21

OP.14B (Crank bearing housing oil grooves) For machining centres

Operation : Bottom face

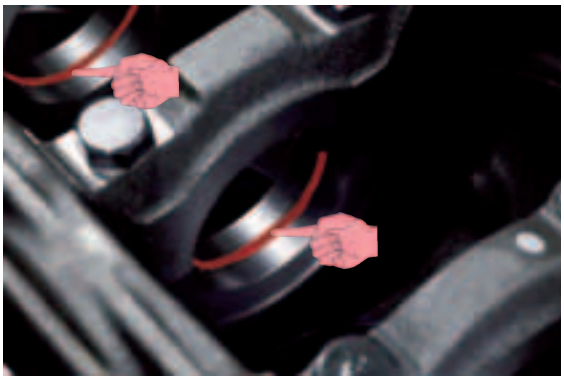

Work material : FC

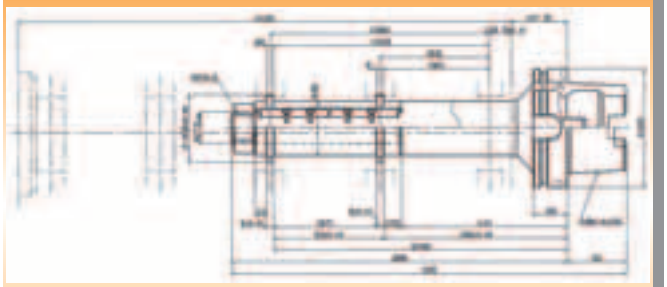

Tool features
Machining using a machining centre capable of 180° rotation. Using 2 carbide metal slitting saws shortens the machining time.

Cutting conditions
vc=70m/min n=398min^{-1} fr =0.6mm/rev
vf=239mm/min ap=2.2mm
Wet

Tooling Sheet 22

OP.15 (Notch grooves) For machining centres

Operation : Bottom face

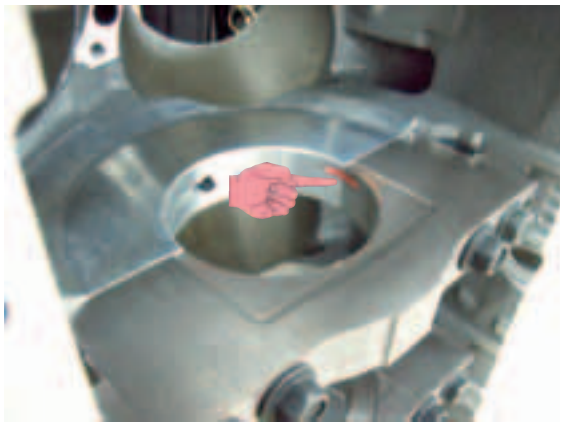

Work material : AL

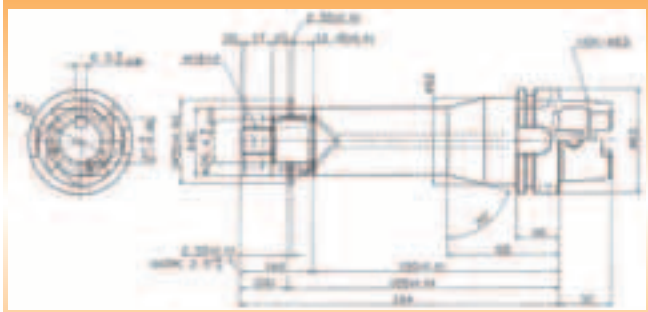

Tool features
Machining using a machining centre capable of 180° rotation. Uses a cemented carbide metal slitting saw equipped with through air & coolant holes.

Cutting conditions
vc=200m/min n=1,273min^{-1} fr =0.4mm/rev
vf=509mm/min ap=2mm
Wet

Tooling Sheet 23

OP.16 (Finishing the crank holes) For special machines

Operation : Bottom face

Work material : FC

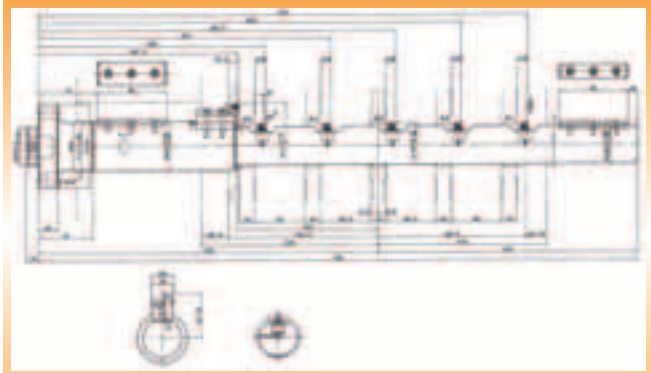

TPGX110304

SPGN050204

Tool features
Line boring bar for finishing crank bearing housing holes. Supported for increased straightness.

Cutting conditions
vc=175 / 335m/min n=950min^{-1} fr =0.10mm/rev
vf=95mm/min ap=0.15mm/per side
Wet

Tooling Sheet 24

OP.17 (Starter motor back face)

Operation : Back face

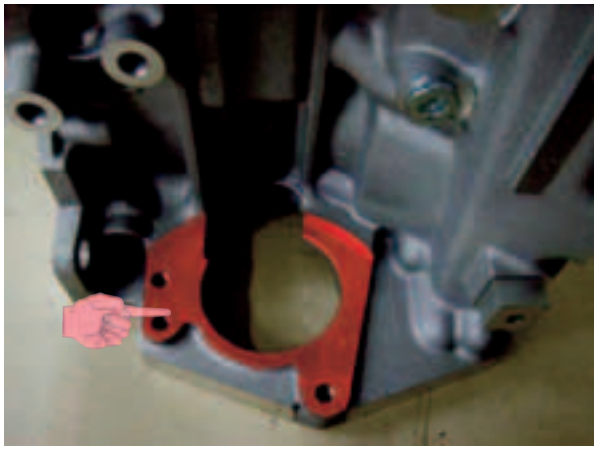

Work material : FC

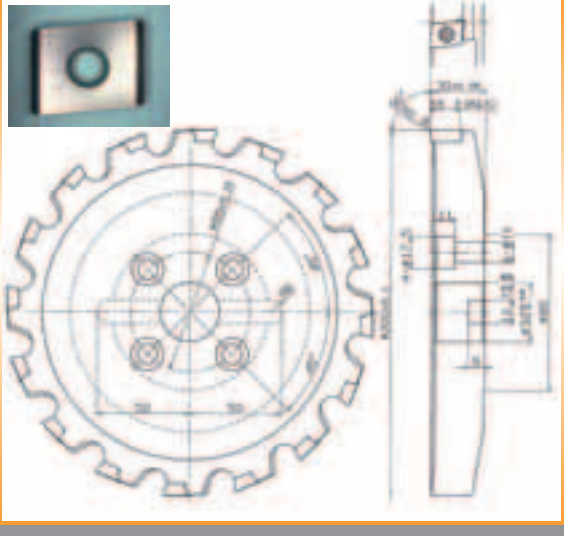

Tool features
Milling cutter to machine the back seating surface by utilizing an angled head. To reduce vibrations because of the thin work material, on edge type inserts for low cutting force are used.

Cutting conditions
vc=120m/min n=191min^{-1} fz=0.16mm/tooth
vf=489mm/min ap=3.0－14.0mm
Wet

Tooling Sheet 25

OP.18 (Rough, back boring starter motor mounting hole) For machining centres

Operation : Back face

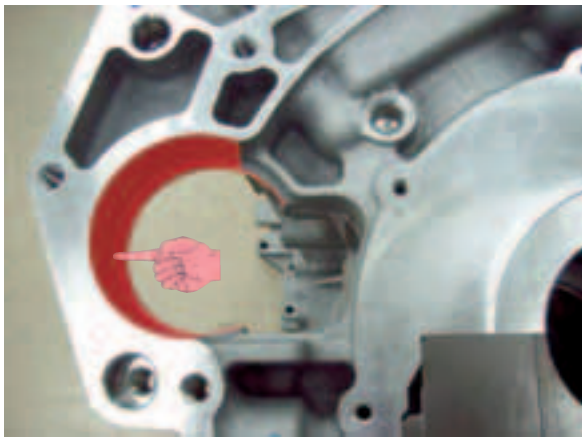

Work material : AL

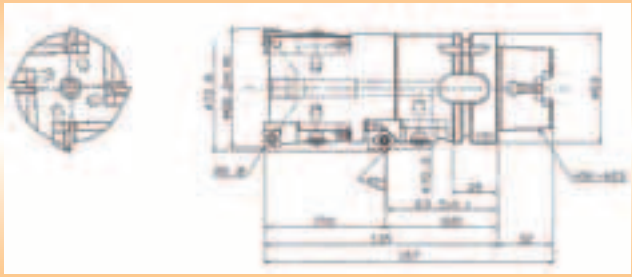

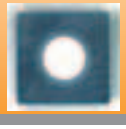

SPGX090308

Tool features
Boring holder for rough boring the starter motor mounting hole + chamfering the hole diameter on a machining centre. Adjustable cutting edge run-out function on the cartridge.

Cutting conditions
vc=407m/min n=1,900min^{-1} fz=0.15mm/tooth
vf=1,140mm/min ap=3.0mm/per side
Wet

Tooling Sheet 26

OP.19 (Finish boring the starter motor mounting hole) For special machines

Operation : Back face

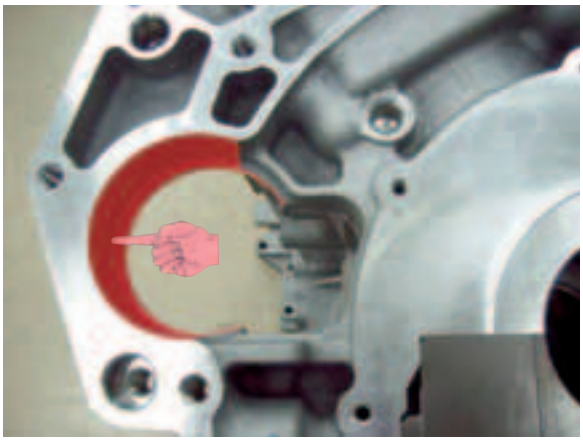

Work material : AL

TPGX110308

Tool features
Boring bar to finish machine using a back boring method on a special machine. Middle portion supported to prevent deflection.

Cutting conditions
vc=429m/min n=1,950min^{-1} fr =0.08mm/rev
vf=156mm/min ap=3.0mm/per side
Wet

Tooling Sheet 27

OP.20 (Transmission support face) For machining centres

Operation : Back face

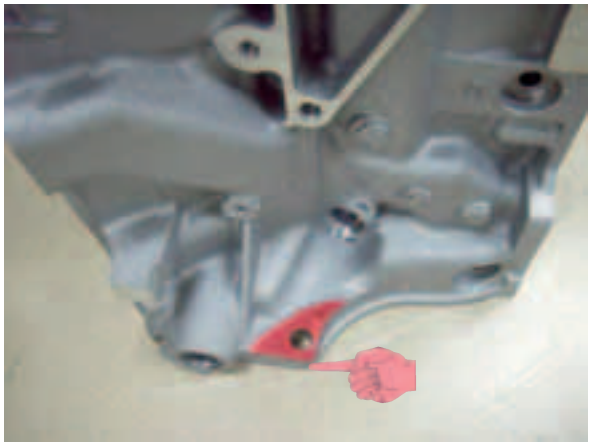

Work material : AL

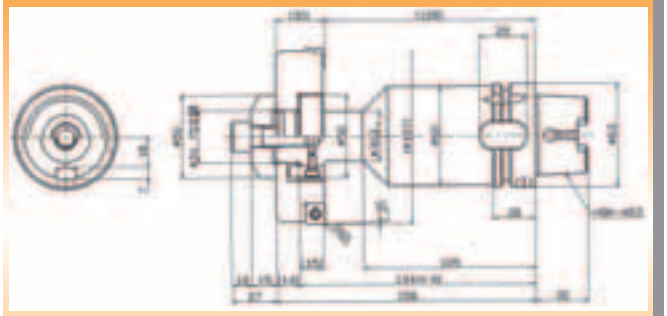

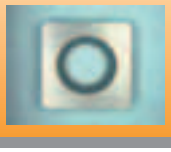

Tool features
Cutter to machine the back seating face on a machining centre. Specially shaped cutter for rigidity.

Cutting conditions
vc=990m/min n=3,000min^{-1} fz=0.15mm/tooth
vf=3,600mm/min ap=3mm
Wet

Tooling Sheet 28

OP.21 (Bearing cap bolt hole)

Operation : Bottom face

Work material : AL

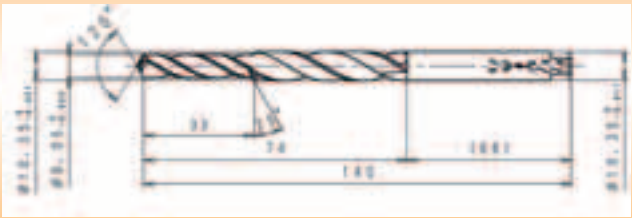

Tool features
Use of sharp cutting edge geometry with double margins specially designed for aluminium increases hole accuracy.

Cutting conditions
vc=195m/min n=6,000min^{-1} fr =0.25mm/rev
Wet

Tooling Sheet 29

OP.22 (Thrust journal oil holes) For machining centres

Operation : Bottom face

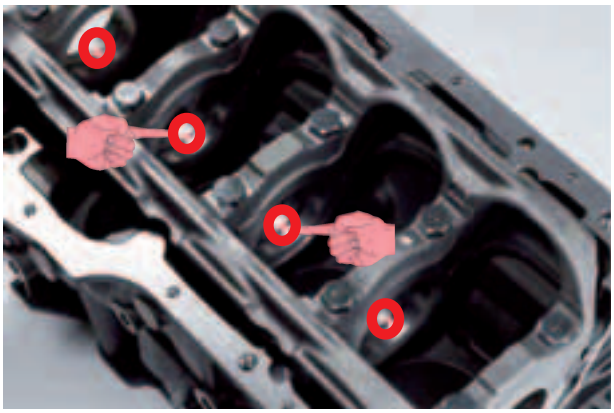

Work material : AL

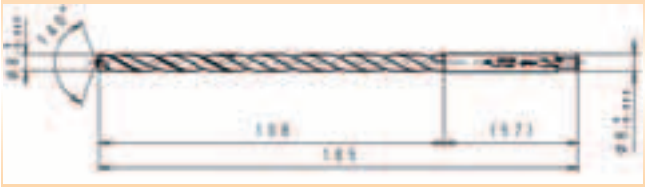

WSTAR Super long drill

Tool features
Wave type cutting edge and flute shape with good chip discharge properties for superior chip control that eliminates the need for high-pressure coolant. Suitable for a standard machining centre.

Cutting conditions
vc=120m/min n=4,770min^{-1} fr =0.30mm/rev
Wet

Tooling Sheet 30

OP.23A (Rough machining the cylinder bore) For machining centres

Operation : Top face

Work material : FC

Strong cutting edge
(Flat land)

Low resistance type
(Positive land)

Tool features
Low resistance inserts with a chipbreaker specially designed for rough boring. 8 inserts, available in tough edge and sharp edge types.

Cutting conditions
vc=90m/min n=353min^{-1} fz=0.25mm/tooth
vf=618mm/min ap=3.0mm/per side
Wet

Tooling Sheet 31

OP.23B (Rough machining the cylinder bore) For special machines

Operation : Top face

Work material : FC

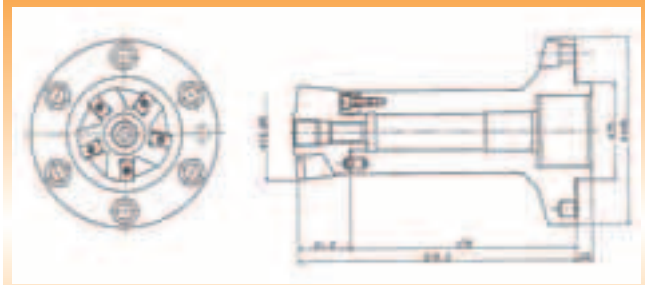

Tool features
Rough boring cutter with on edge type inserts for high cutting edge strength.

Cutting conditions
vc=83m/min n=349min^{-1} fz=0.3mm/tooth
vf=524mm/min ap=3.0mm/per side
Wet

Tooling Sheet 32

OP.24 (Chamfering the cylinder bore back face) For machining centres

Operation : Top face

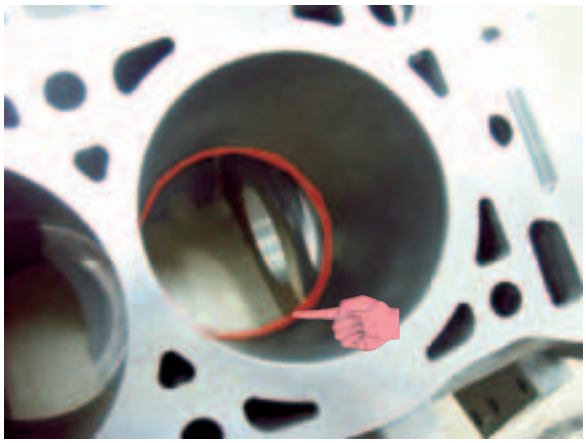

Work material : FC

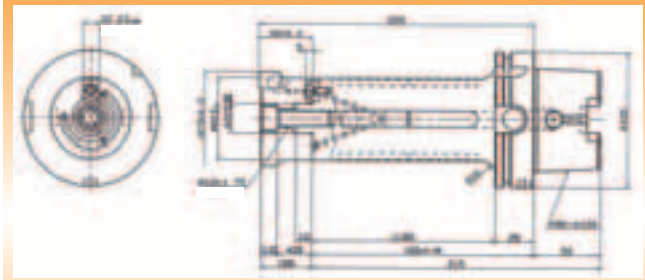

Tool features
Contour machining to chamfer and remove the excess material of the lower part of the liner on a machining centre. Cemented carbide pad is used to prevent deflection during cutting, thereby increasing machining accuracy.

Cutting conditions
vc=308m/min n=1,400min^{-1} fr =0.10mm/rev
vf=140mm/min ap=2.0mm
Wet

Tooling Sheet 33

OP.25 (Head bolt holes)

Operation : Bottom face

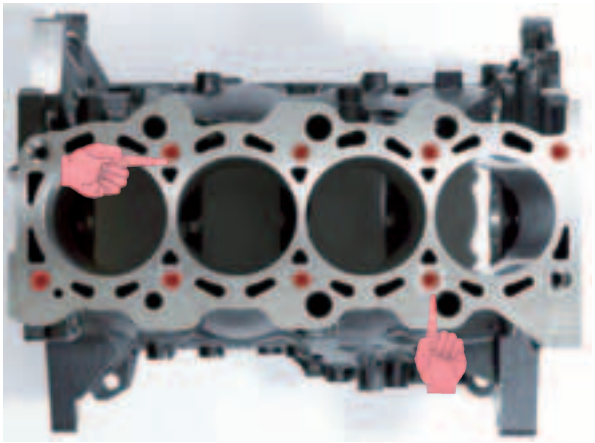

Work material : AL

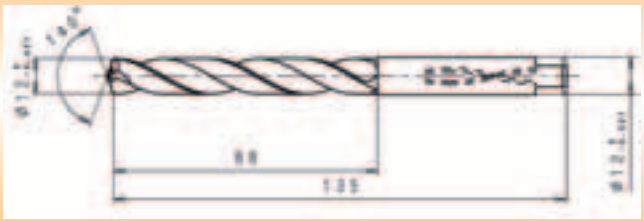

Tool features
Wave type cutting edge and special flute geometry for superior chip control and to decrease cutting resistance and power consumption. Excellent chip evacuation with compact type chips produced.

Cutting conditions
vc=200m/min n=5,300min^{-1} fr =0.25mm/rev
Wet

Tooling Sheet 34

OP.26 (Main oil gallery hole)

Operation : Front face

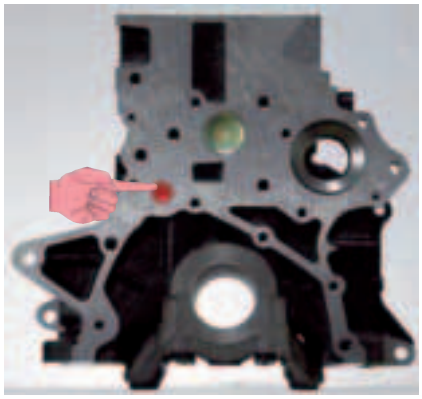

Work material : AL

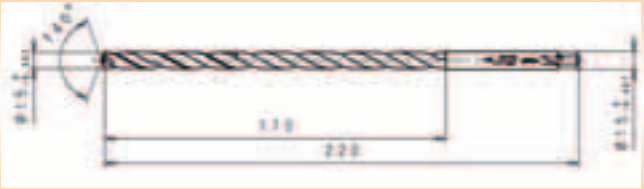

WSTAR Super long drill

Tool features
Wave type cutting edge and special flute geometry for superior chip control and to decrease cutting resistance and power consumption.

Cutting conditions
vc=200m/min n=4,250min^{-1} fr =0.30mm/rev
Wet

Tooling Sheet 35

OP.27 (Oil holes)

Operation : Top face

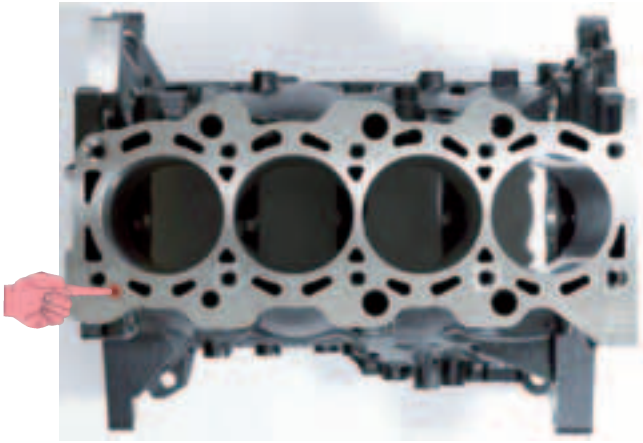

Work material : AL

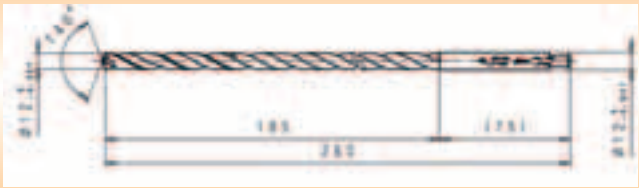

WSTAR Super long drill

Tool features
Wave type cutting edge and flute shape for superior chip control and to decrease cutting resistance and power consumption.

Cutting conditions
vc=200m/min n=5,300min^{-1} fr =0.25mm/rev
Wet

Tooling Sheet 36

OP.28 (O-ring groove) For machining centres

Operation : Back face

Work material : AL

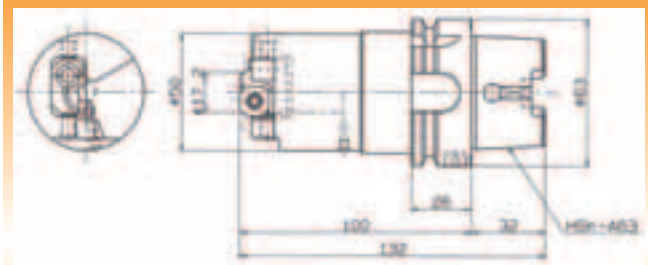

Tool features
Cutter for machining O-ring groove + chamfering on a machining centre. Although a small hole diameter a cartridge type for adjustable cutting edge run-out is used.

Cutting conditions
vc=270m/min n=5,000min^{-1} fr =0.085mm/rev
vf=425mm/min ap=1.2mm
Wet

Tooling Sheet 37

OP.29 (Dowel location holes)

Operation : Top face

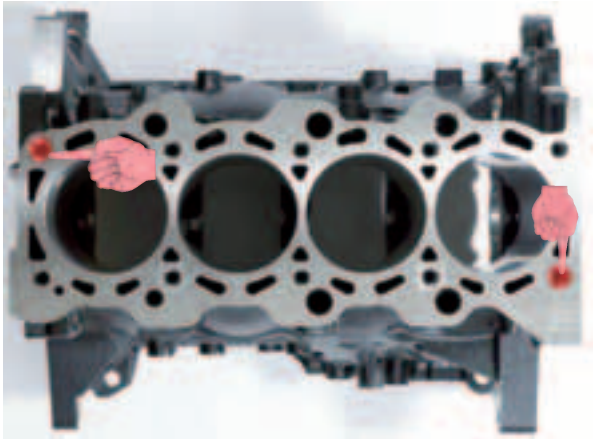

Work material : AL

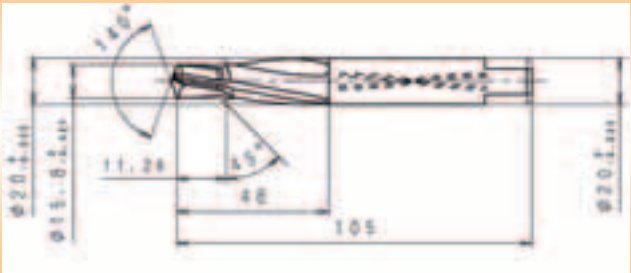

Tool features
Use of a guide pad (4-point support) and multi flutes allows good discharge of small chips. Enables hole diameters of H8 tolerance to be drilled in one operation.

Cutting conditions
vc=140m/min n=2,230min^{-1} fr =0.17mm/rev
Wet

Tooling Sheet 38

OP.30 (Bolt holes)

Operation : Top face

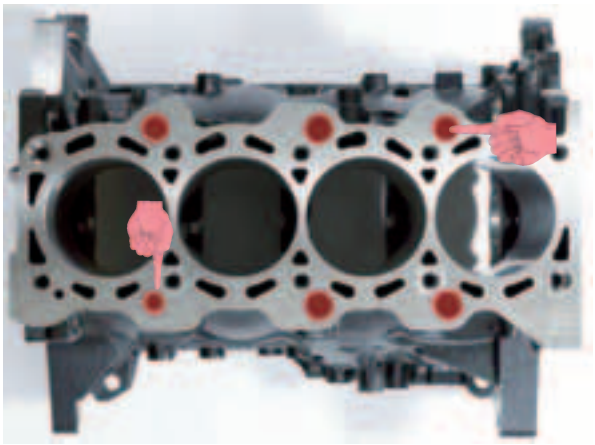

Work material : AL

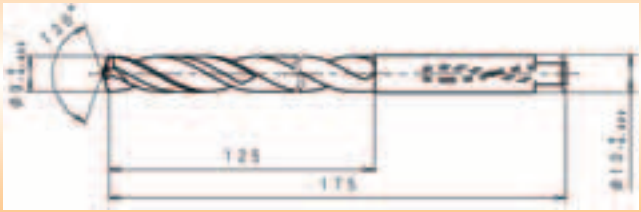

Tool features
Multiple effect of using a wave type cutting edge and flute shape with superior chip disposal. Double margins increase hole accuracy.

Cutting conditions
vc=200m/min n=7,070min^{-1} fr =0.23mm/rev
Wet

Tooling Sheet 39

OP.31 (Finishing the top face) For special machines

Operation : Top face

Work material : FC

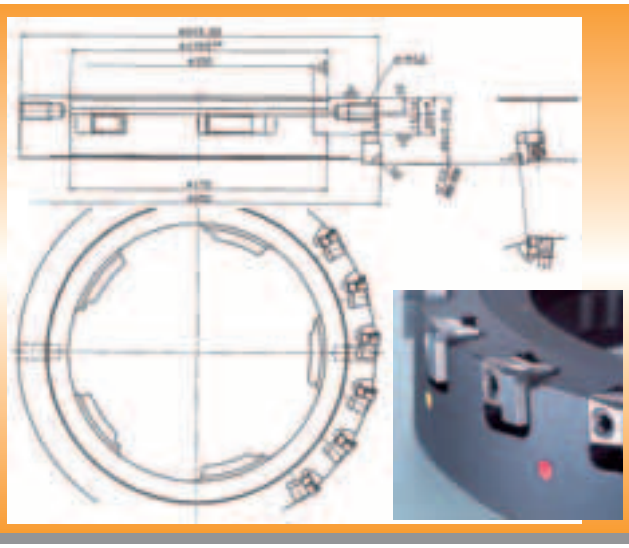

Tool features
Used for finishing the top face on a special machine. By using wedge clamped wiper inserts type for all pockets and a special CBN grade insert enables high speed machining and an improved surface finish. Use of single bolt mounting (QFB) for easy cutter exchange. (Ø250 : Cutter weight 7.4kg)

Cutting conditions
vc=393m/min n=500min^{-1} fz=0.15mm/tooth
vf=1,500mm/min ap=0.5mm
Dry

Tooling Sheet 40

OP.32 (Finishing the cylinder bore) For special machines

Operation : Top face

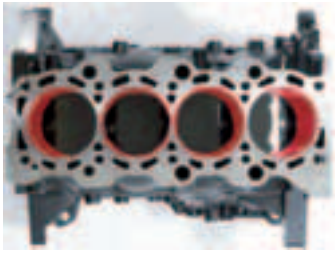

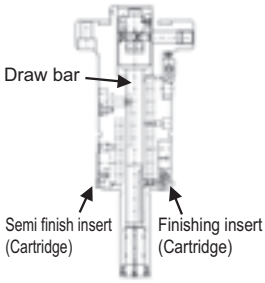

Work material : FC

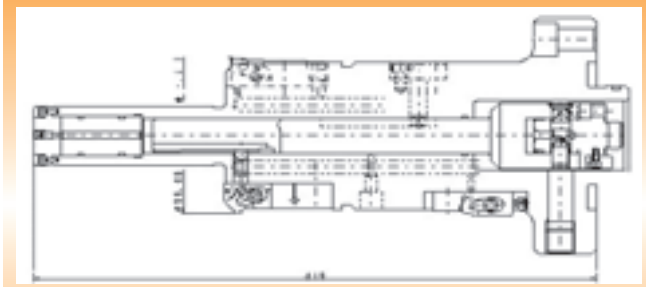

4 cutting edge indexable insert with highly wear-resistant CBN grade.

Tool features
Reciprocating type machining by utilizing a drawbar function on a special machine. To prevent return marks, back boring is performed for the finishing operation. Anti-vibration dampers incorporated in the tool body prevents vibration.

Cutting conditions
vc=597m/min n=2,000min^{-1} fr =0.35mm/rev
vf=700mm/min ap=0.1mm/per side
Wet

Tooling Sheet 41

OP.33 (Finishing the cylinder bore) For special machines

Operation : Top face

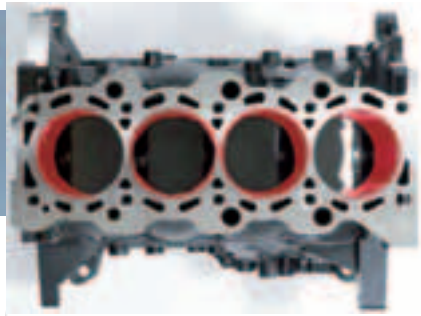

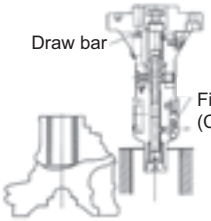

Work material : FC

4 cutting edge indexable insert with highly wear-resistant CBN grade.

Tool features
Reciprocating type machining by utilizing a drawbar function on a special machine. To prevent return marks, back boring is performed for the finishing operation. Anti-vibration dampers incorporated in the tool body prevents vibration.

Cutting conditions
vc=410m/min n=1,500min^{-1} fr =0.25mm/rev
vf=375mm/min ap=0.15mm/per side
Wet

Tooling Sheet 42

Crank shaft

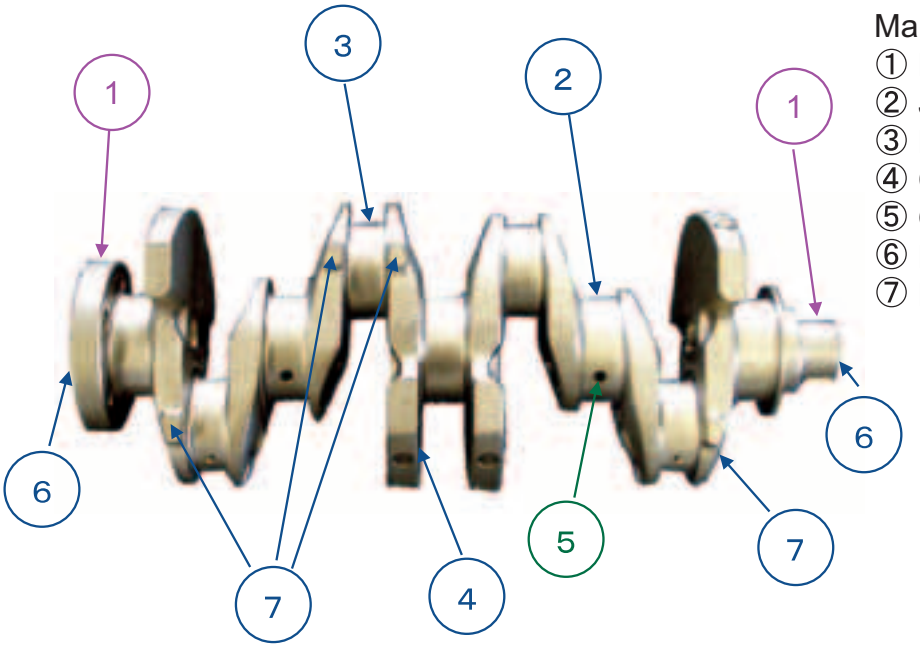

Main machining
① End shafts
② Journal
③ Pin
④ Counter weight
⑤ Oil hole
⑥ End surfaces
⑦ Datum surface

Machining methods
Boring
Milling
Drilling
Turning

OP.1 (End centres + Overall length machining) For machining centres

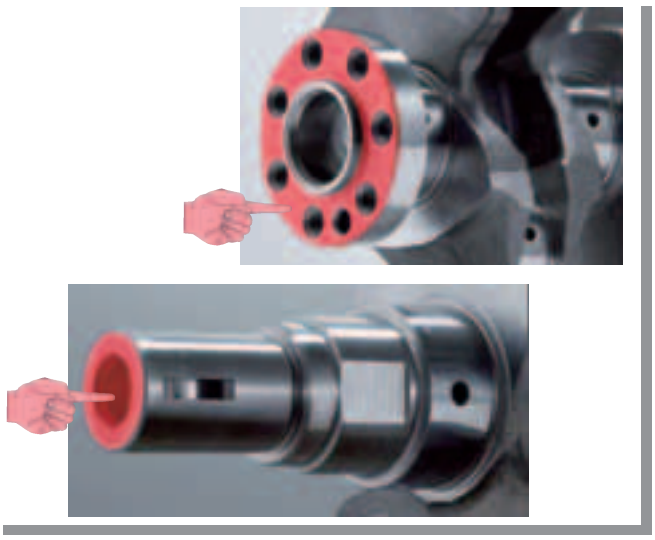

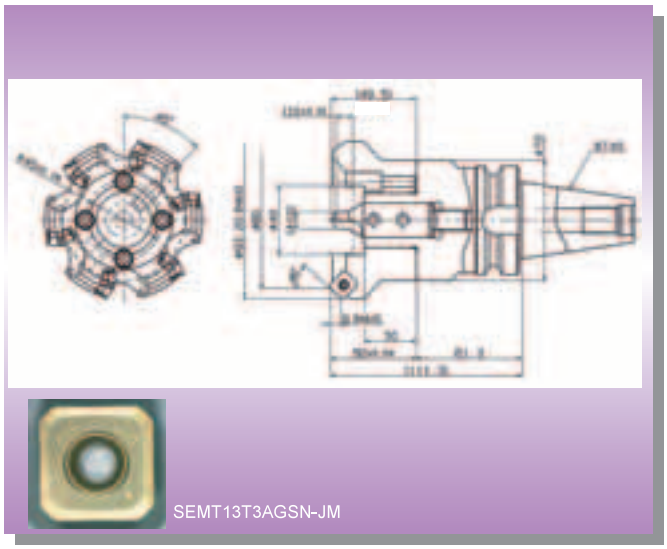

Tool features
Process consolidation by combining the machining (plunging) and facing (cross feed) of the centre holes of the flange / pulley axis. Standard ASX inserts are used.

Cutting conditions
vc=161m/min n=640min^{-1} fz=0.15mm/tooth
vf=576mm/min ap=2.0mm
Wet

Tooling Sheet 1

OP.2 Counter weight (Counter weight external turning) For CNC lathes

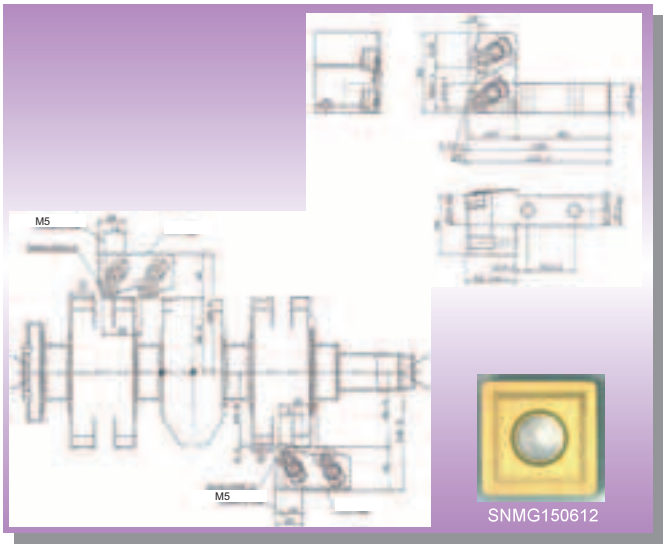

Tool features
Combination jaw type holder prevents vibration and machines two surfaces simultaneously for high efficiency. A double clamp type insert holder for secure heavy interrupted cutting enables longer tool life.

Cutting conditions
vc=150m/min n=375min^{-1} fr =0.25mm/rev ap=2.0mm
Wet

Tooling Sheet 2

OP.3 Counter weight (Counter weight facing) For CNC lathes

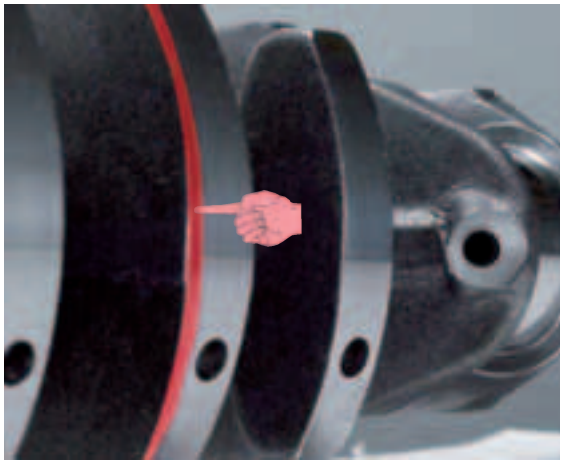

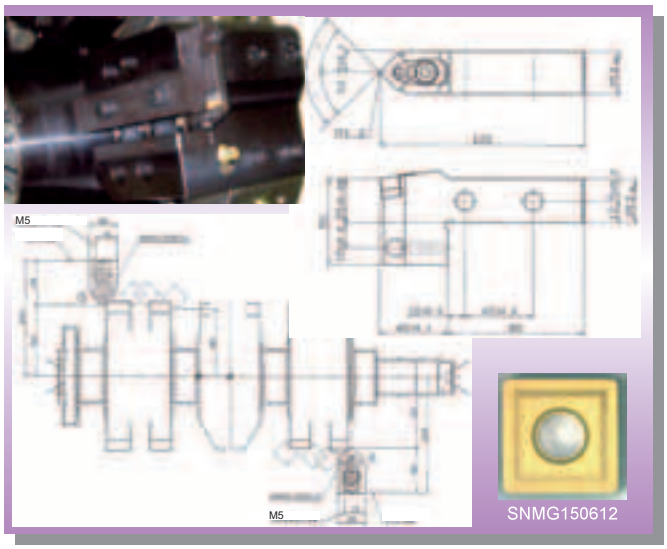

Tool features
Combination jaw type holder prevents vibration.
A double clamp type insert holder for secure heavy interrupted cutting enables longer tool life.

Cutting conditions
vc=180m/min n=455min^{-1} fr =0.25mm/rev
Wet

Tooling Sheet 3

OP.4 (Pulley shaft / roughing) For CNC lathes

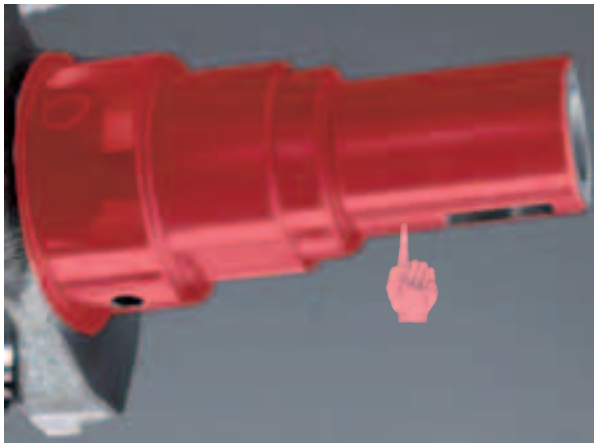

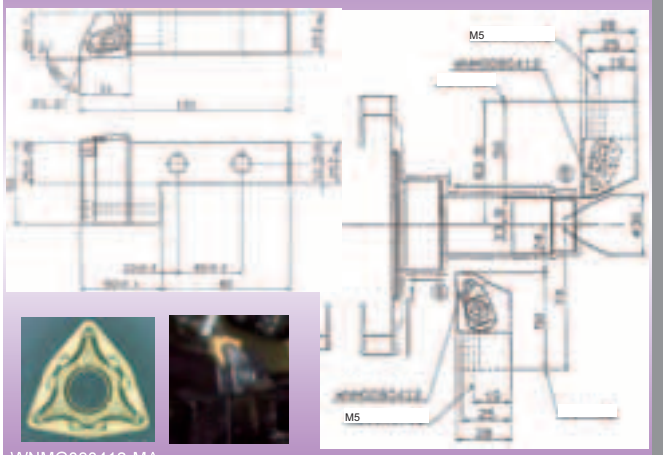

WNMG080412-MA

Tool features
Combination jaw type holder prevents vibration.
A double clamp type insert holder for secure heavy interrupted cutting enables longer tool life.

Cutting conditions
vc=200m/min n=1,340min^{-1} fr=0.25mm/rev ap=2.0mm
Wet

Tooling Sheet 4

OP.5 (Flange outer diameter / roughing) For CNC lathes

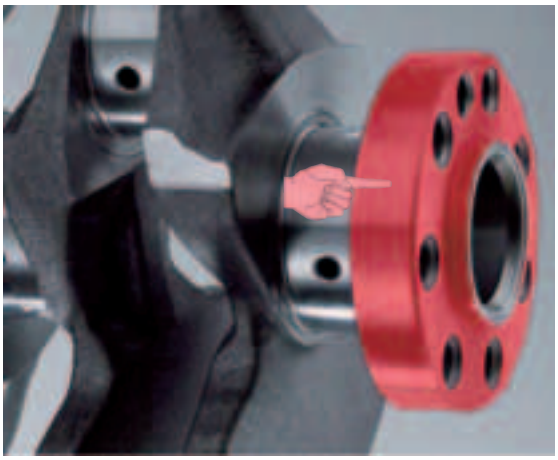

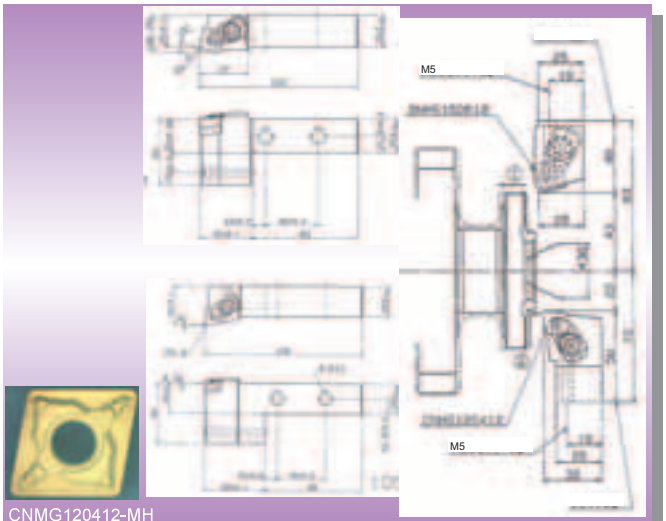

CNMG120412-MH

Tool features
Combination jaw type holder prevents vibration.
A double clamp type insert holder for secure heavy interrupted cutting enables longer tool life.

Cutting conditions
vc=180m/min n=670min^{-1} fr =0.25mm/rev ap=2.5mm
Wet

Tooling Sheet 5

OP.6 (Journal diameter machining) For CNC lathes

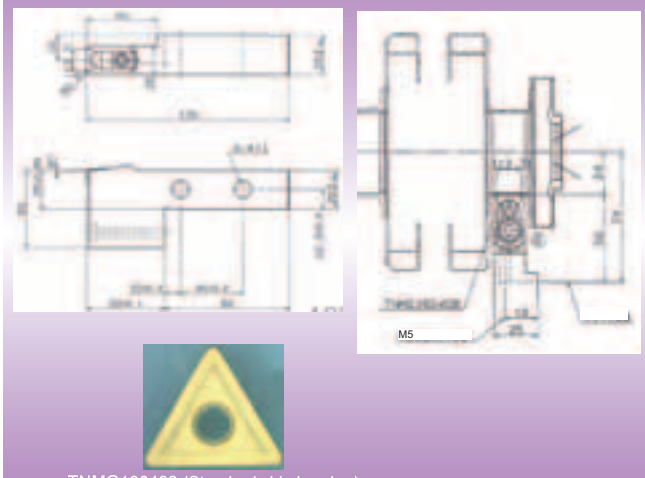

TNMG160408 (Standard chip breaker)

Tool features
Combination jaw type holder prevents vibration.
A double clamp type insert holder for secure heavy interrupted cutting enables longer tool life.

Cutting conditions
vc=150m/min n=1,000min^{-1} fr =0.2mm/rev ap=1.5mm
Wet

Tooling Sheet 6

OP.7 (Counter weight / side face machining / roughing) For CNC lathes

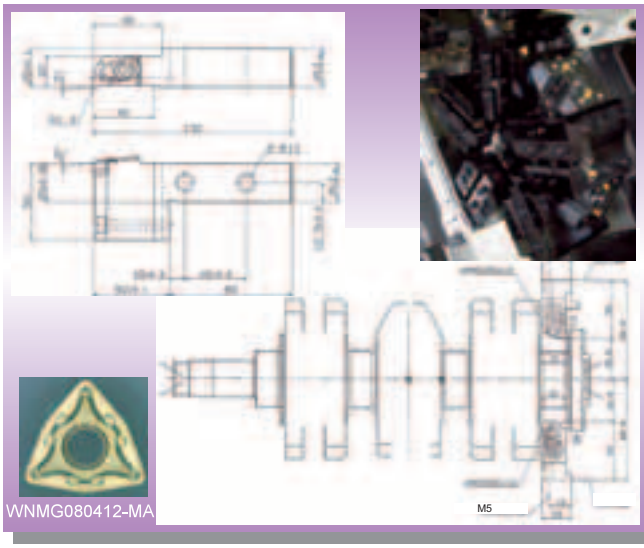

WNMG080412-MA

Tool features
Combination jaw type holder prevents vibration.
A double clamp type insert holder for secure heavy interrupted cutting enables longer tool life.

Cutting conditions
vc=180m/min n=830−1,200min^{-1} fr =0.2mm/rev
ap=2.0mm
Wet

Tooling Sheet 7

OP.8 (Journal diameter / finishing) For CNC lathes

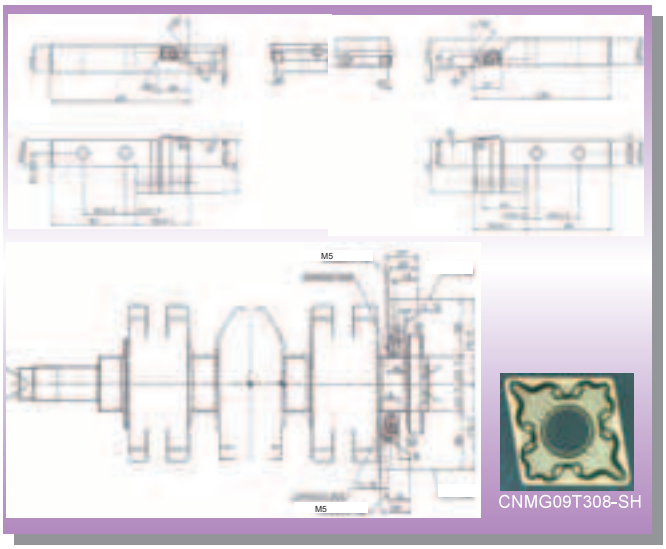

Tool features
Combination jaw type holder prevents vibration.
A double clamp type insert holder for secure heavy interrupted cutting enables longer tool life.

Cutting conditions
vc=180m/min n=1,200min^{-1} fr =0.2mm/rev
ap=−2.0mm
Wet

Tooling Sheet 8

OP.9 (1 journal / pulley shaft finishing) For CNC lathes

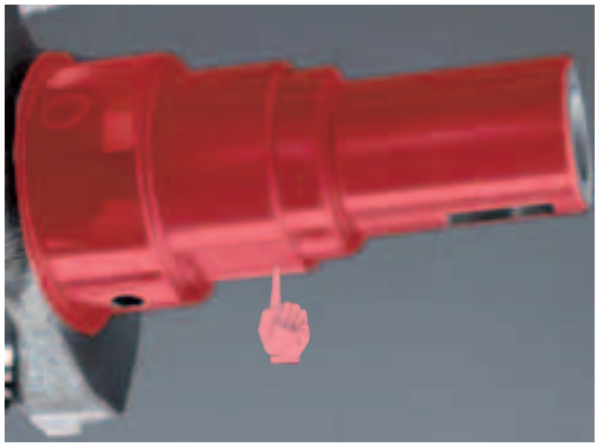

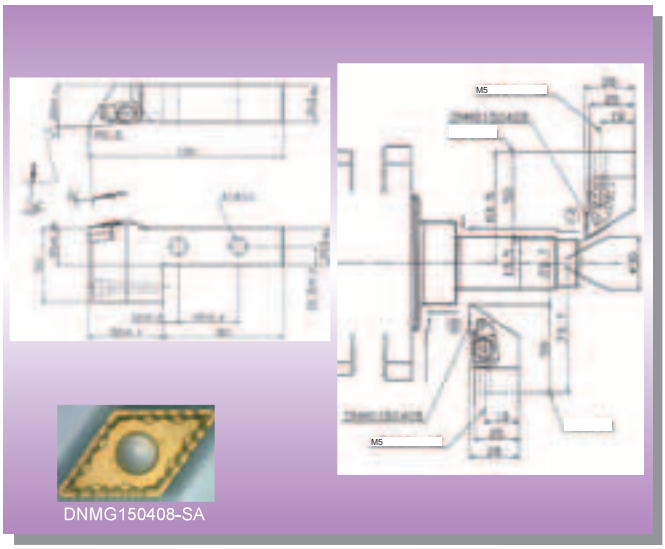

Tool features
Combination jaw type holder prevents vibration.
A double clamp type insert holder for secure heavy interrupted cutting enables longer tool life.

Cutting conditions
vc=200m/min n=1,340min^{-1} fr =0.25mm/rev
ap=−2.0mm
Wet

Tooling Sheet 9

OP.10 (Central journal diameter / roughing) For CNC lathes

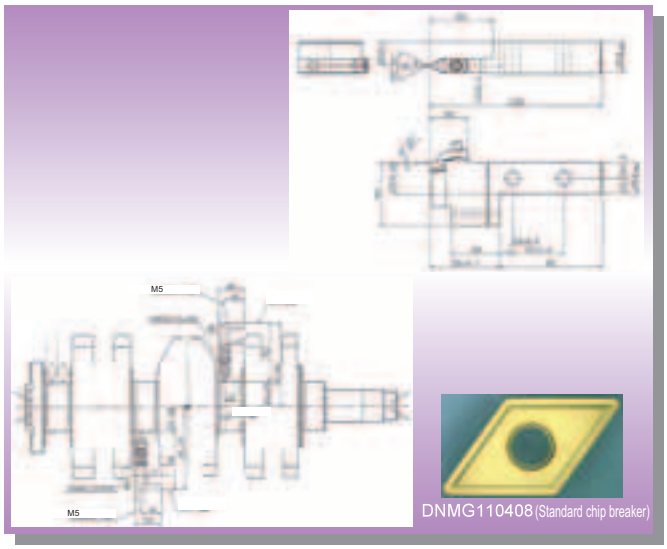

Tool features
Combination jaw type holder prevents vibration.
A double clamp type insert holder for secure heavy interrupted cutting enables longer tool life.

Cutting conditions
vc=180m/min n=1,230min^{-1} fr=0.2mm/rev ap=2.0mm
Wet

Tooling Sheet 10

OP.11 (Journal diameter / roughing) For CNC lathes

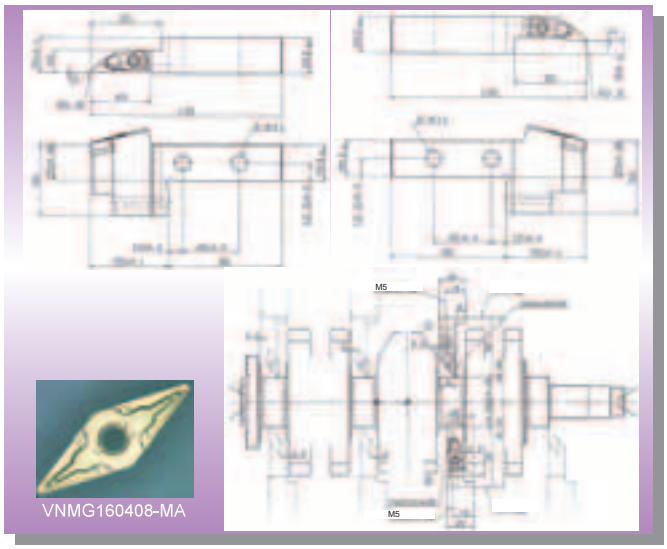

Tool features
Combination jaw type holder prevents vibration.
A double clamp type insert holder for secure heavy interrupted cutting, enables longer tool life.

Cutting conditions
vc=180m/min n=1,230min^{-1} fr=0.2mm/rev ap=2.0mm
Wet

Tooling Sheet 11

OP.12 (Journal thrust face machining) For CNC lathes

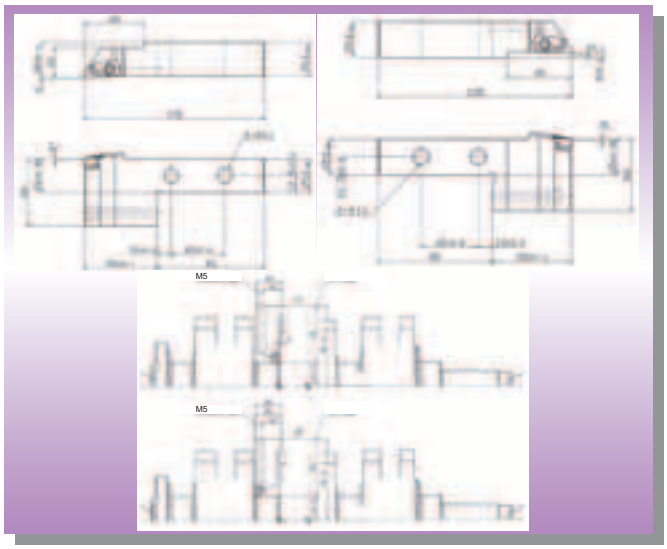

Tool features
Combination jaw type holder prevents vibration.
A double clamp type insert holder for secure heavy interrupted cutting enables longer tool life.

Cutting conditions
vc=200m/min n=928−1,366min^{-1} fr =0.12mm/rev
ap=0.25mm
Wet

Tooling Sheet 12

OP.13A (Pin) For special machines

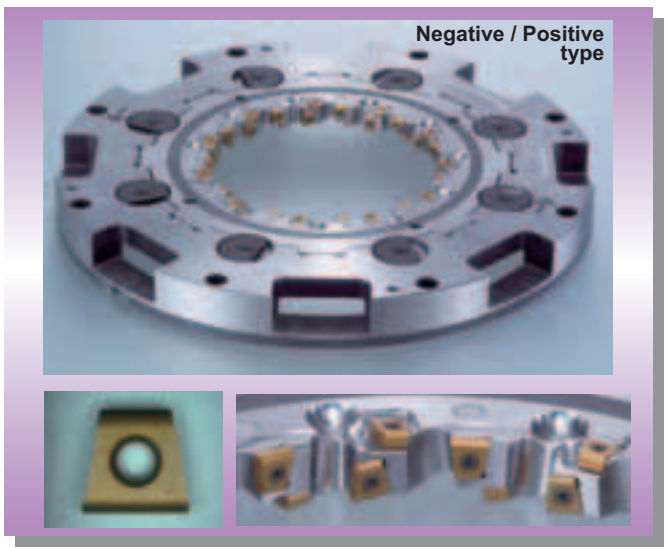

Tool features
Trapeziodal insert shape with negative/positive edges. Economical 8 cutting edge type inserts. 40% lower cutting resistance than double negative type eliminates the need for removing burrs. Unique quick change system gives high run-out accuracy and high rigidity.
Enables 1.5 times longer tool life than conventional cutters.

Cutting conditions
vc=140m/min n=239min^{-1} P1:fz=0.3mm/tooth
P2:fz =0.15mm/tooth R:fz =0.5mm/tooth
ap=2.0mm
Dry

Tooling Sheet 13

OP.13B (Pin) For special machines

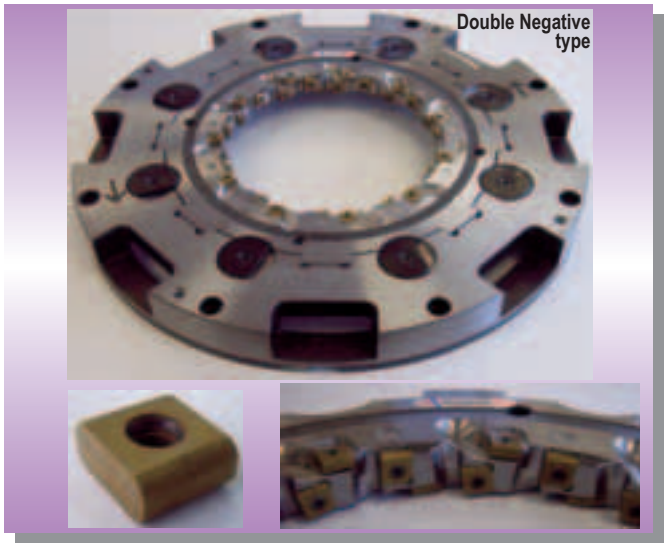

Tool features
Economical 8 cutting edge type inserts. Double negative edge type tough geometry and a special insert grade prevents fracture. Unique quick change system gives high run-out accuracy and high rigidity.

Cutting conditions
vc=140m/min n=239min^{-1} P1:fz=0.3mm/tooth
P2:fz=0.15mm/tooth R:fz=0.5mm/tooth
ap=2.0mm
Dry

Tooling Sheet 14

OP.14 (Centre correcting) For machining centres

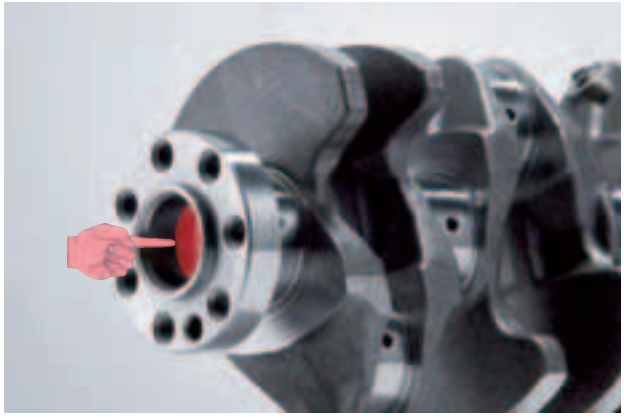

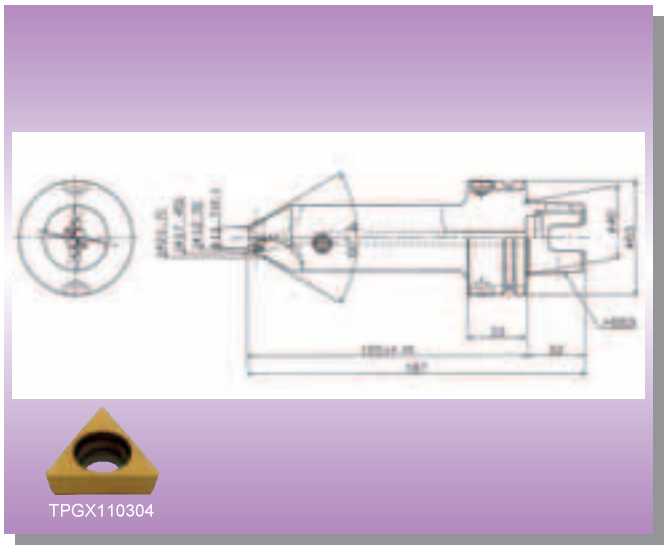

Tool features
With internal through air & coolant holes to enable stable coolant supply even to the long overhang edge. Suitable for a wide range of chamfer diameters.

Cutting conditions
vc=165m/min n=3,000min^{-1} fr=0.25mm/rev
vf=750mm/min
Wet

Tooling Sheet 15

OP.15 (Centre hole / first process)

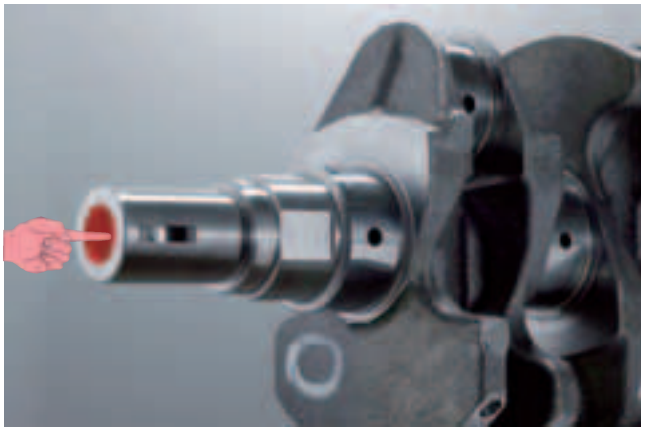

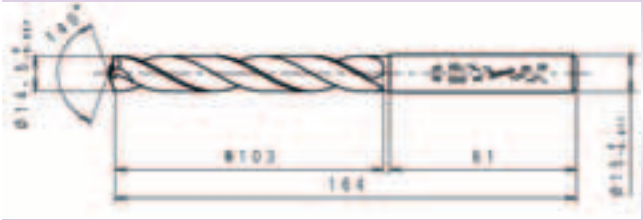

Tool features
Use of MWE / MWS drills' sharp cutting edge geometry enables high accuracy and long tool life and reduction of tool costs.

Cutting conditions
vc=90m/min n=1,980min^{-1} fr =0.20mm/rev
Wet

Tooling Sheet 16

OP.16 (Oil hole) For machining centres

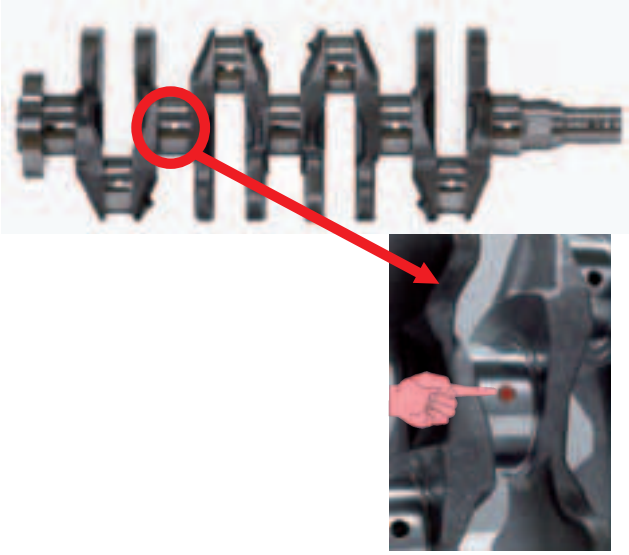

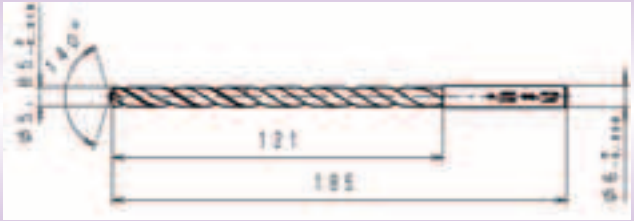

WSTAR Super long drill

Tool features
Use of MPS / MSL super long drills cutting edge geometry for highly efficient, stable deep hole drilling. Also suitable for MQL.

Cutting conditions
vc=75m/min n=4,080min^{-1} fr =0.2mm/rev
MQL

Tooling Sheet 17

OP.17 (Oblique hole / hole diameter spot facing)

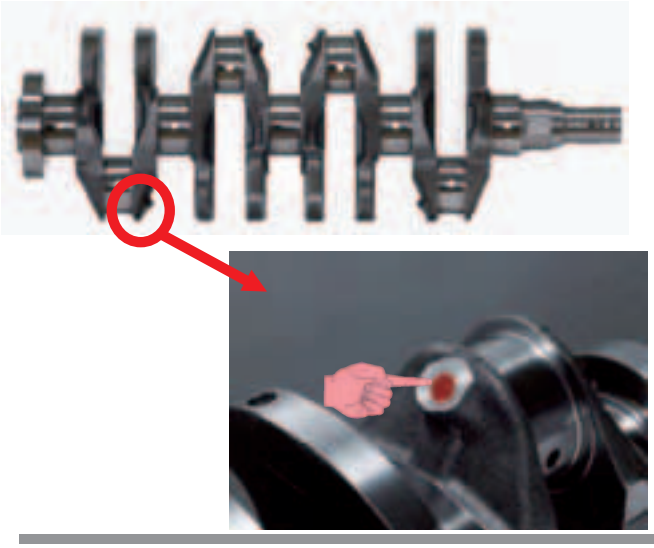

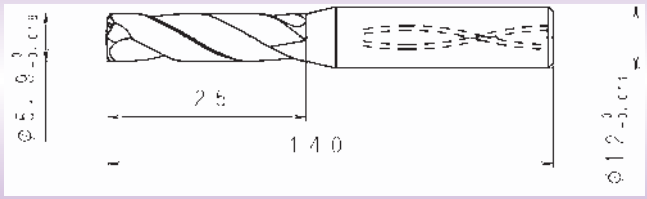

Tool features
Large diameter shank + cutting edge radius give high rigidity and increased fracture resistance. Enables stable drilling without vibration and ensures high precision stable machining of the pilot hole in the subsequent process.

Cutting conditions
vc=60m/min n=3,240min^{-1} fr =0.07mm/rev
MQL

Tooling Sheet 18

OP.18 (Oblique hole / guide hole)

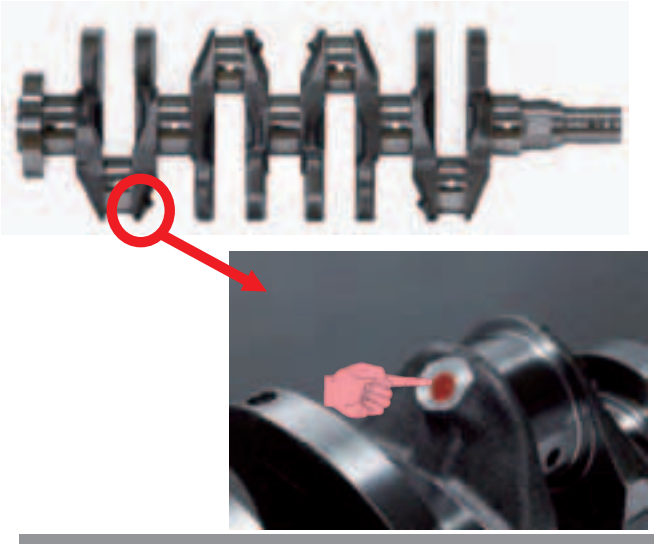

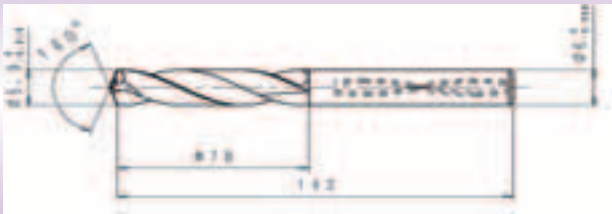

Tool features
Use of MWE / MWS drills' cutting edge geometry enables highly efficient and precise machining of the pilot hole. Also suitable for MQL.

Cutting conditions
vc=75m/min n=4,050min^{-1} fr =0.2mm/rev
MQL

Tooling Sheet 19

OP.19 (Oblique hole / deep hole)

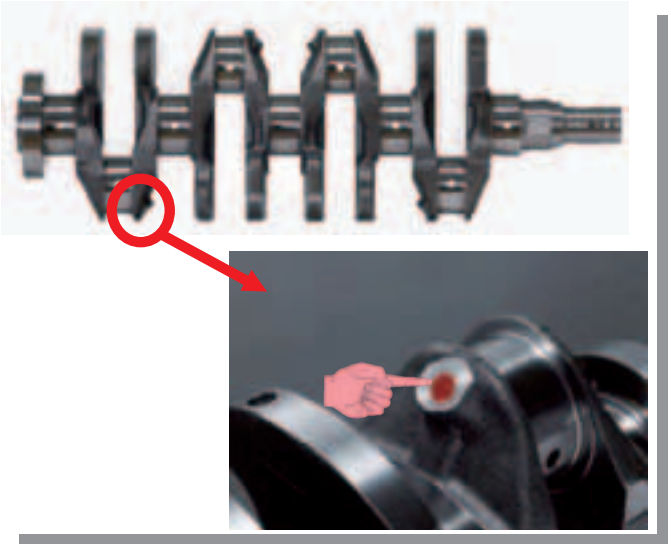

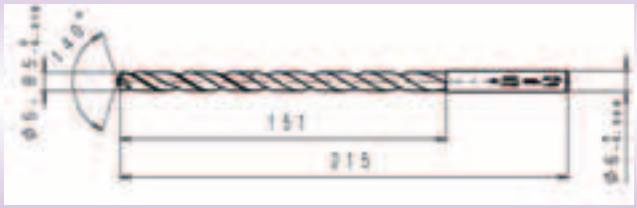

WSTAR Super long drill

Tool features
Use of MPS / MSL super long drills cutting edge geometry for highly efficient, stable, deep hole drilling. Also suitable for MQL.

Cutting conditions
vc=70m/min n=3,800min^{-1} fr =0.15mm/rev
MQL

Tooling Sheet 20

OP.20 (Oblique hole / hole diameter chamfering)

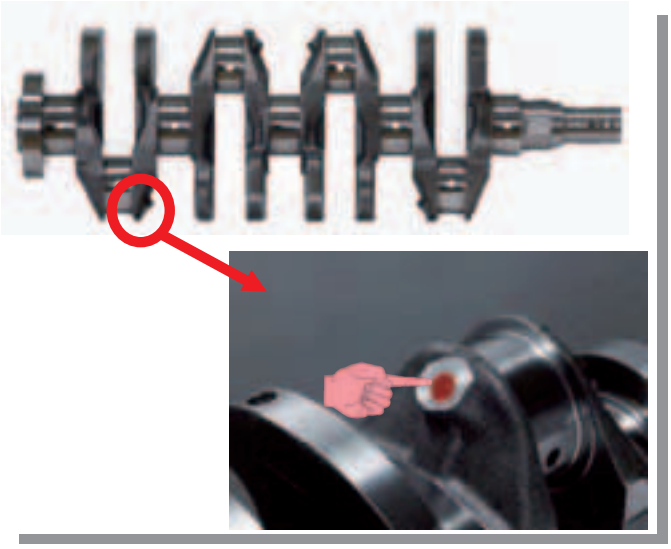

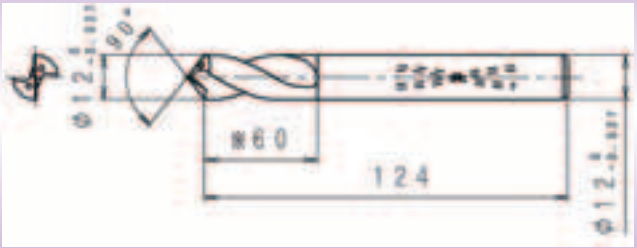

Tool features
Use of MIRACLE coating allows greatly increased tool life. Also suitable for MQL.

Cutting conditions
Vc=97m/min n=2,600min^{-1} fr =0.15mm/rev
MQL

Tooling Sheet 21

Con rod

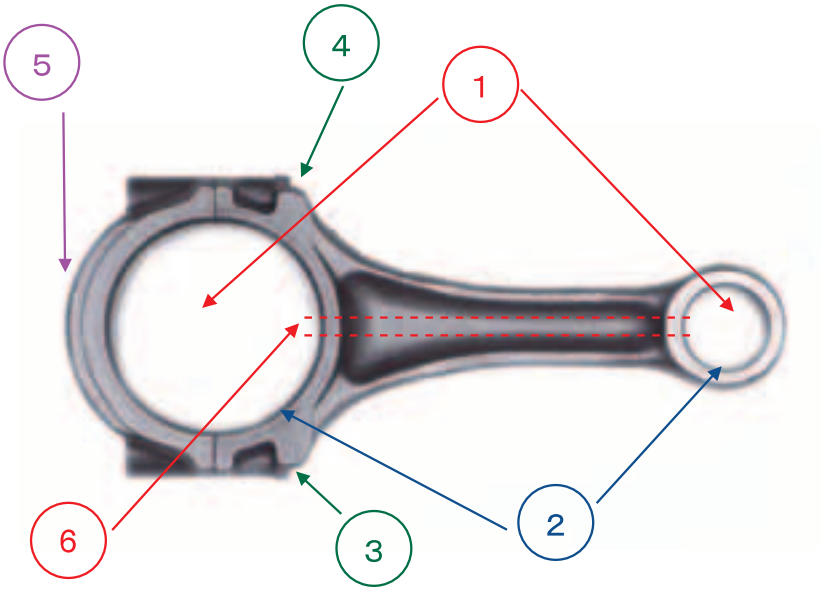

Main machining
① Big and little end holes
② Big and little end hole faces
③ Bolt hole
④ Bolt seat
⑤ Balance
⑥ Oil hole

Machining methods
Boring
Milling
Drilling

OP.1 (Oil hole)

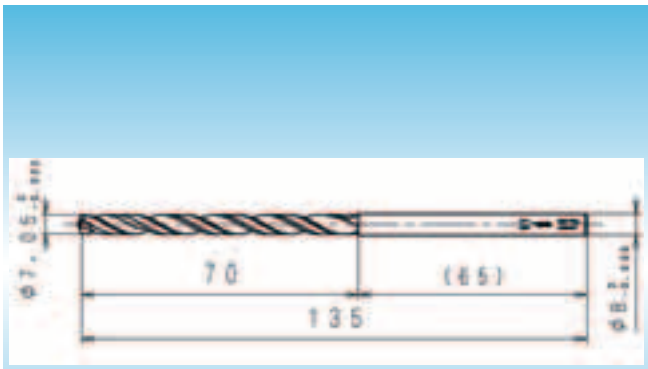

WSTAR Super long drill

Tool features
Use of MPS / MSL super long drills cutting edge geometry for highly efficient, stable, deep hole drilling. Also suitable for MQL.

Cutting conditions
vc=80m/min n=3,600min^{-1} fr =0.15mm/rev
MQL

Tooling Sheet 1

OP.2 (Bolt hole)

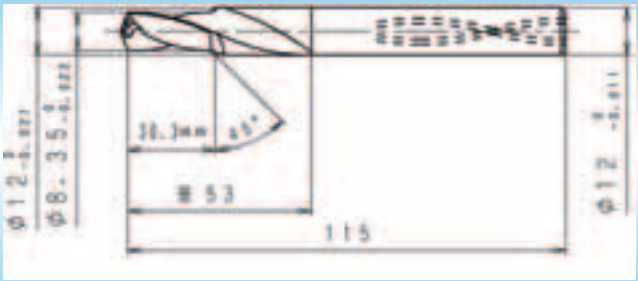

MZE/MZS stepped drills

Tool features
Sharp, tough straight cutting edge for accurate entry and high accuracy drilling. Use of MIRACLE coating with high wear and oxidation resistance allows long tool life. Also suitable for MQL.

Cutting conditions
vc=80m/min n=2,120min^{-1} fr =0.20mm/rev
MQL

Tooling Sheet 2

OP.3 (Little end hole / roughing)

Work material : SV20CV-CLS

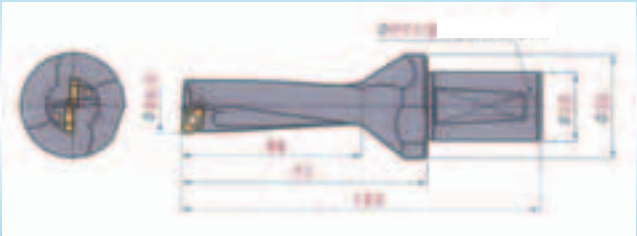

Tool features
Use of economical 4 cutting edge inserts. Indexable type drill with lower cutting noise and excellent insert location characteristics.

Cutting conditions
vc=80m/min n=1,060min^{-1} fr =0.11mm/rev
Wet

Tooling Sheet 3

OP.4 (Little end hole semi-finishing / chamfering) For special machines

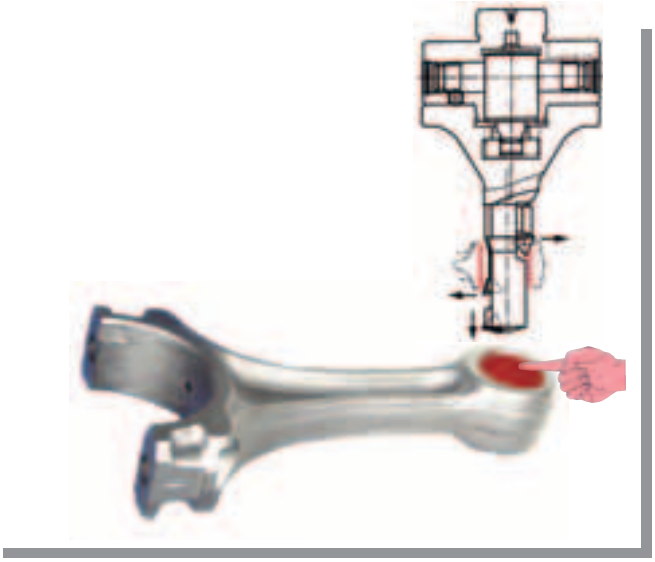

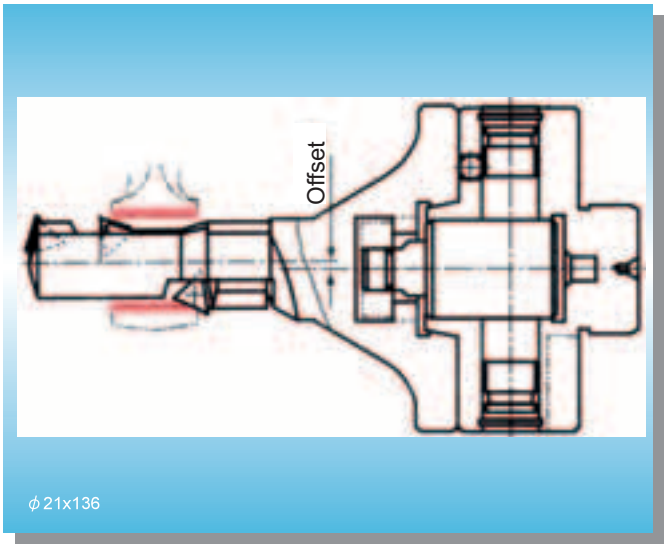

Tool features
Semi-finishing and chamfering with the same tool.
Use of taper mating type quick change system.

Cutting conditions
vc=150m/min n=1,900min^{-1} fr =0.19mm/rev
ap=0.5mm
Wet/Dry

Tooling Sheet 4

OP.5 (Little end hole finishing) For special machines

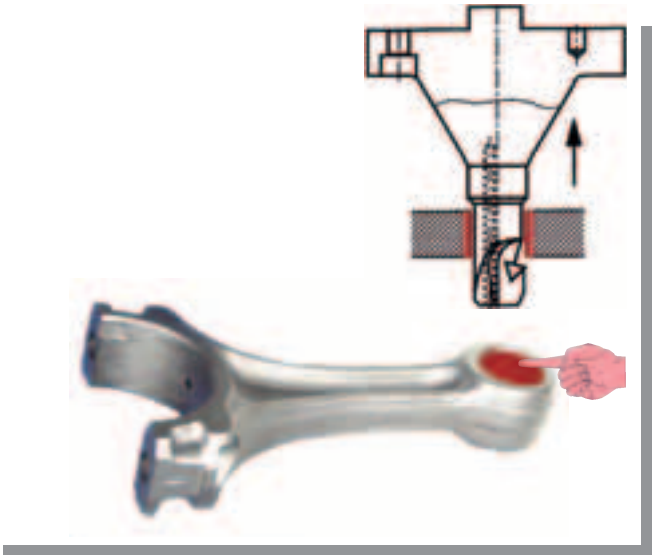

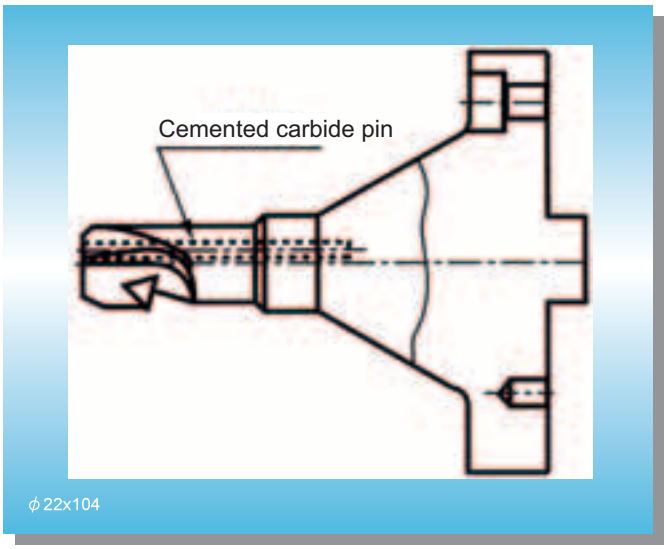

Tool features
Cemented carbide pin increases vibration resistance.

Cutting conditions
vc=150m/min n=1,900min^{-1} fr =0.08mm/rev
ap=0.3mm
Wet/Dry

Tooling Sheet 5

OP.6 (Big end hole chamfering / roughing) For special machines

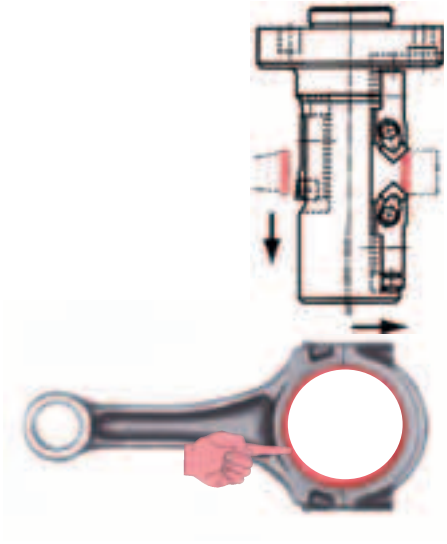

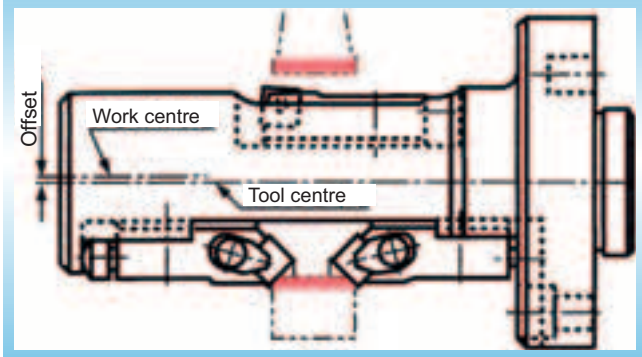

Φ52.5x138

Tool features
Rough boring and chamfering of both end faces with the same tool.

Cutting conditions
vc= 110m/min n=640min^{-1} fr =0.25 mm/rev
ap=2.0mm
Wet/Dry

Tooling Sheet 6

OP.7 (Big end hole semi-finishing) For special machines

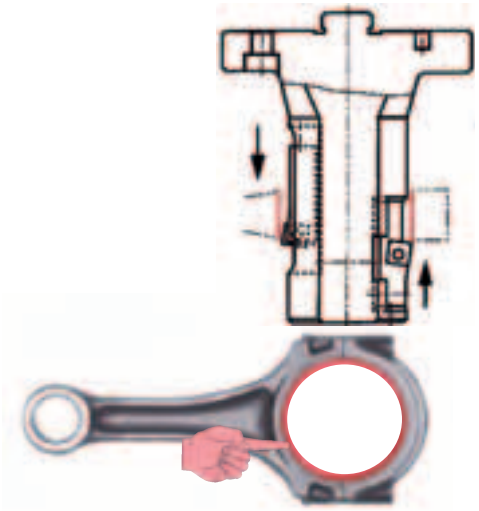

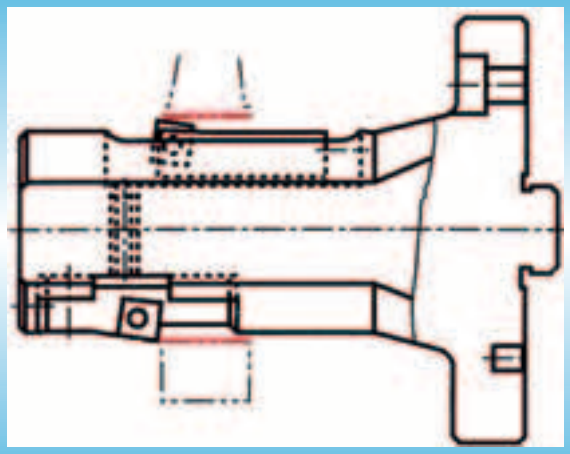

Φ52.8x124

Tool features
Semi-finishing and finishing processes with the same tool. Finishing with back boring prevents return marks.

Cutting conditions

Semi-finishing	Finishing
vc=225m/min	vc=225m/min
n=1,300min^{-1}	n=1,300min^{-1}
fr=0 25mm/rev	fr=0.122mm/rev
ap=0.15mm	ap=0.1mm

Wet/Dry

Tooling Sheet 7

OP.8A (Weight adjustment milling) For special machines

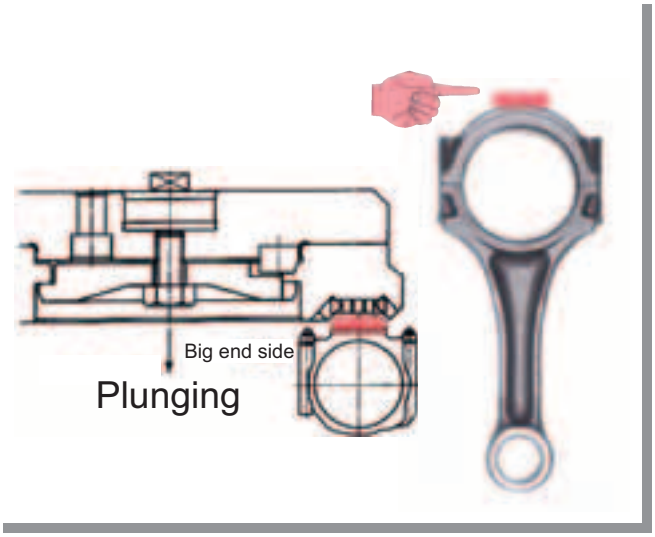

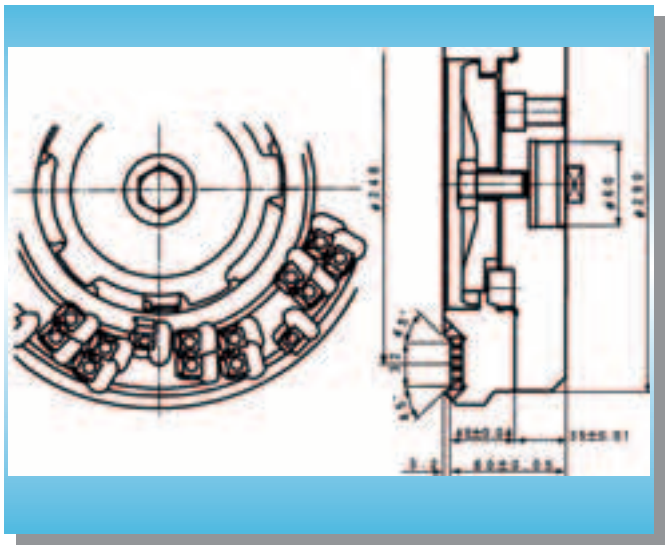

Tool features
Use of economical 8 cutting edge type inserts. Utilises on edge type inserts to allow multiple cutting edges. Manual, single bolt mounting of the cutter for easy cutter exchange.

Cutting conditions
vc=90m/min n=115min^{-1} fz=0.01mm/tooth
ap=－5.0mm
Wet/Dry

Tooling Sheet 8

OP.8B (Weight adjustment milling)

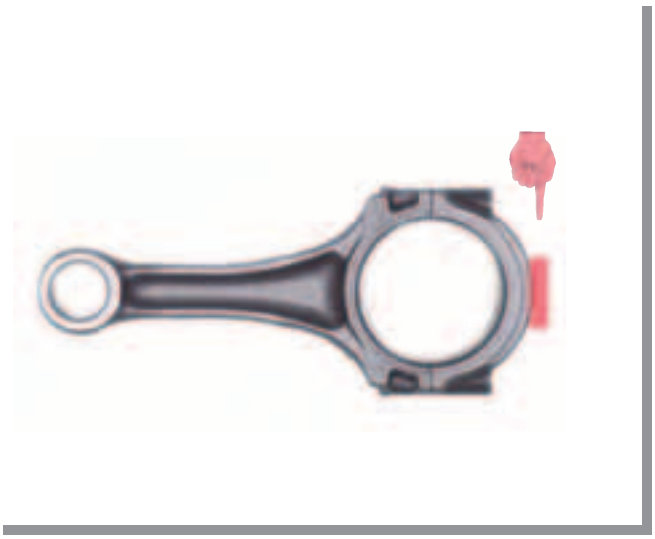

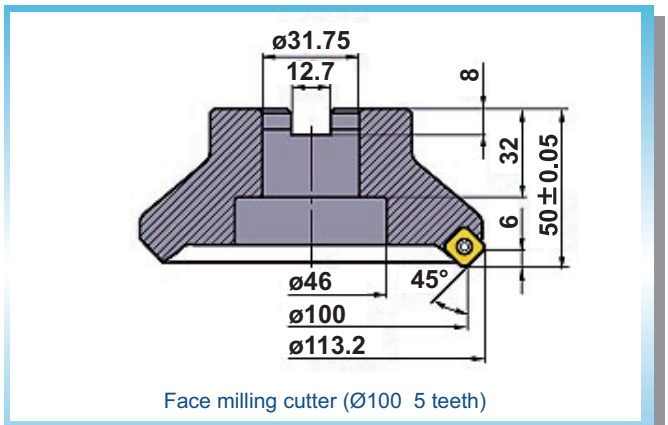

Face milling cutter (Ø100 5 teeth)

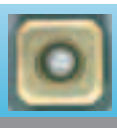

SEMT13T3AGSN-JM F7030

Tool features
Standard ASX445 face milling cutter. Screw-on type, general face milling cutter to permit stable cutting even under high load conditions, with carbide shim + unique Anti-Fly Insert (AFI) mechanism.

Cutting conditions
vc=180m/min n=570min^{-1} fz=0.2mm/tooth
ap=2.0－3.0mm
Dry

Tooling Sheet 9

Cam shaft

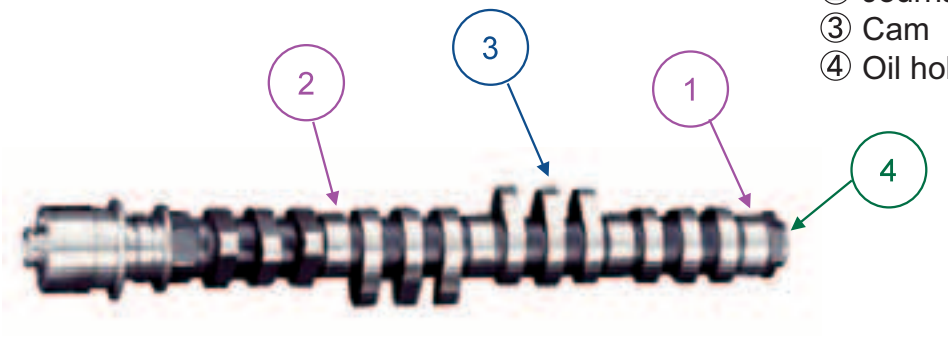

Main machining
① End journal
② Journal
③ Cam
④ Oil hole

Machining methods
Milling
Drilling
Turning

OP.1 (Oil hole)

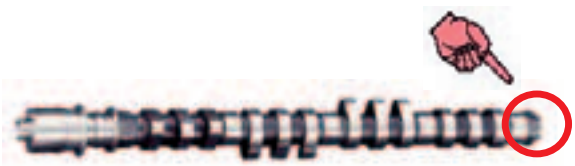

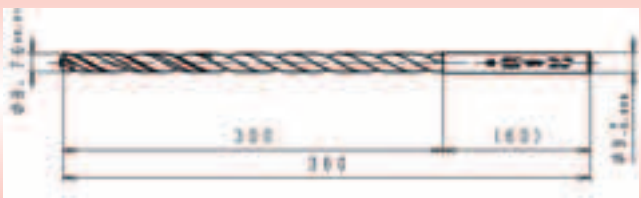

WSTAR Super long drill

Tool features
Use of MPS / MSL super long drills cutting edge geometry for highly efficient, stable, deep hole drilling. Also suitable for MQL.

Cutting conditions
vc=80m/min n=2,900min^{-1} fr =0.14mm/rev
Wet

Tooling Sheet 1

OP.2A (Journal outer diameter)

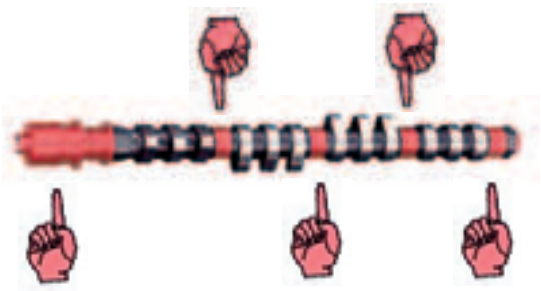

Work material : S55C

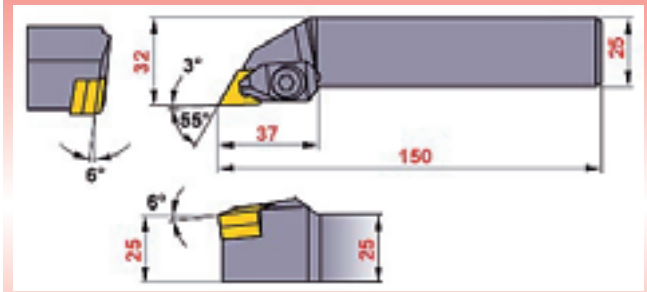

DNMG150408-SH UE6010

Tool features
A combination of UE6010 + SH chip breaker prevent chips from wrapping, enabling 3 times longer tool life than conventional types.

Cutting conditions
vc=200m/min f=0.2mm/rev ap=0.5mm
Wet

Tooling Sheet 2

OP.2B (Journal outer diameter)

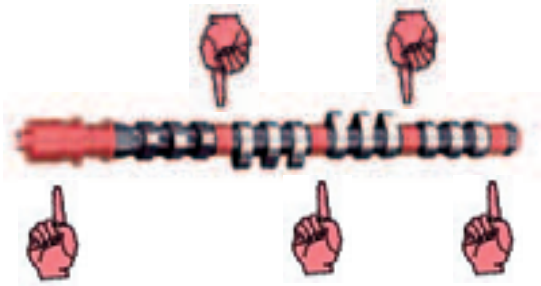

Work material : FCD600

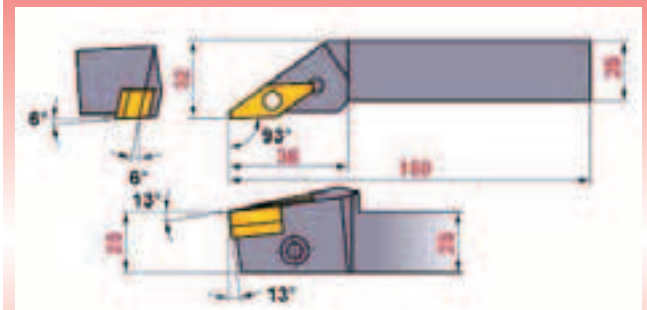

VNMG160408 (Standard chip breaker) UC5015

Tool features
Use of UC5015 gives 1.5 times longer tool life than a competitor's CVD coated insert.

Cutting conditions
vc=158m/min f=0.25mm/rev ap=1.0mm
Dry

Tooling Sheet 3

OP.2C (Journal outer diameter)

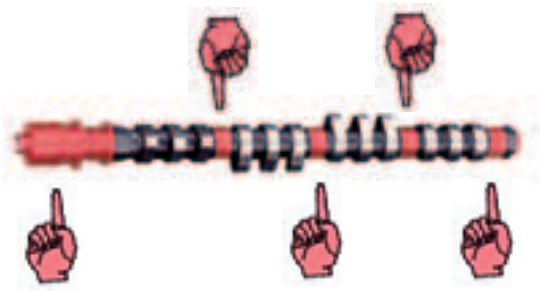

Work material : FC250

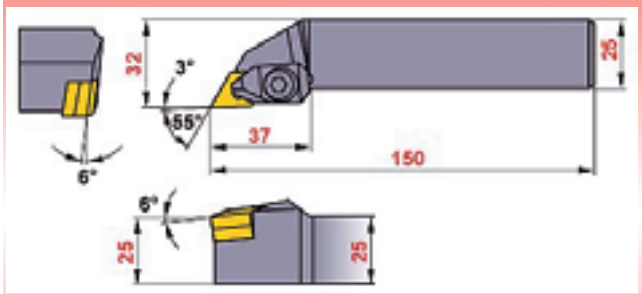

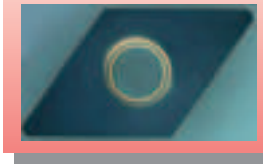

DNMA150412 UC5105

Tool features
By using UC5015 grade gives more than 1.5 times longer tool life than a competitor's ceramic grade insert.

Cutting conditions
vc=300m/min f=0.15mm/rev ap=0.5mm
Dry

Tooling Sheet 4

OP.3 (Cam surface / roughing) For special machines

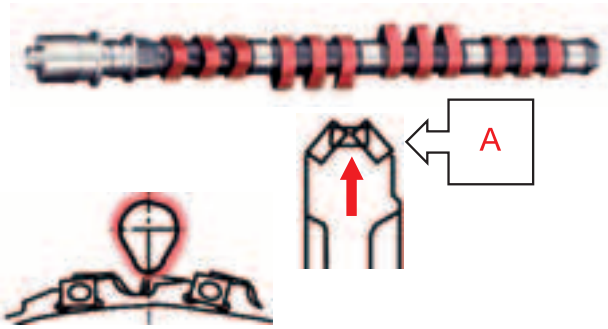

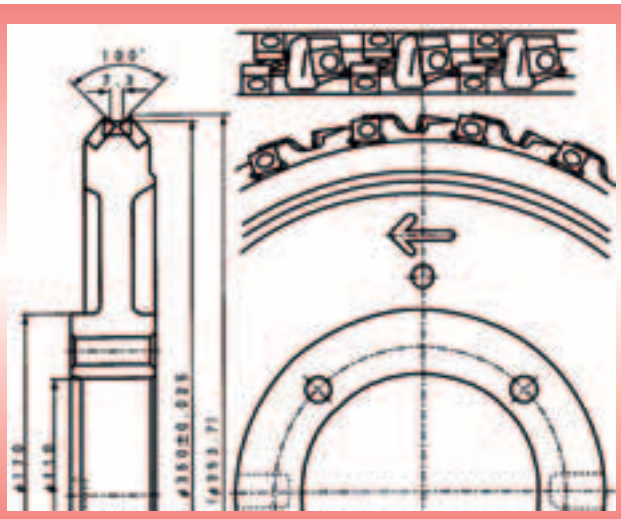

Tool features
Use of on edge type inserts increases body and insert rigidity. A row of cutting edges simultaneously machines the cams peripheral edge and chamfer.

Cutting conditions
vc=119m/min P:fz=0.10mm/tooth R:fz=0.4mm/tooth
ap=2.0mm
Wet

Tooling Sheet 5

Memo

Memo

Memo

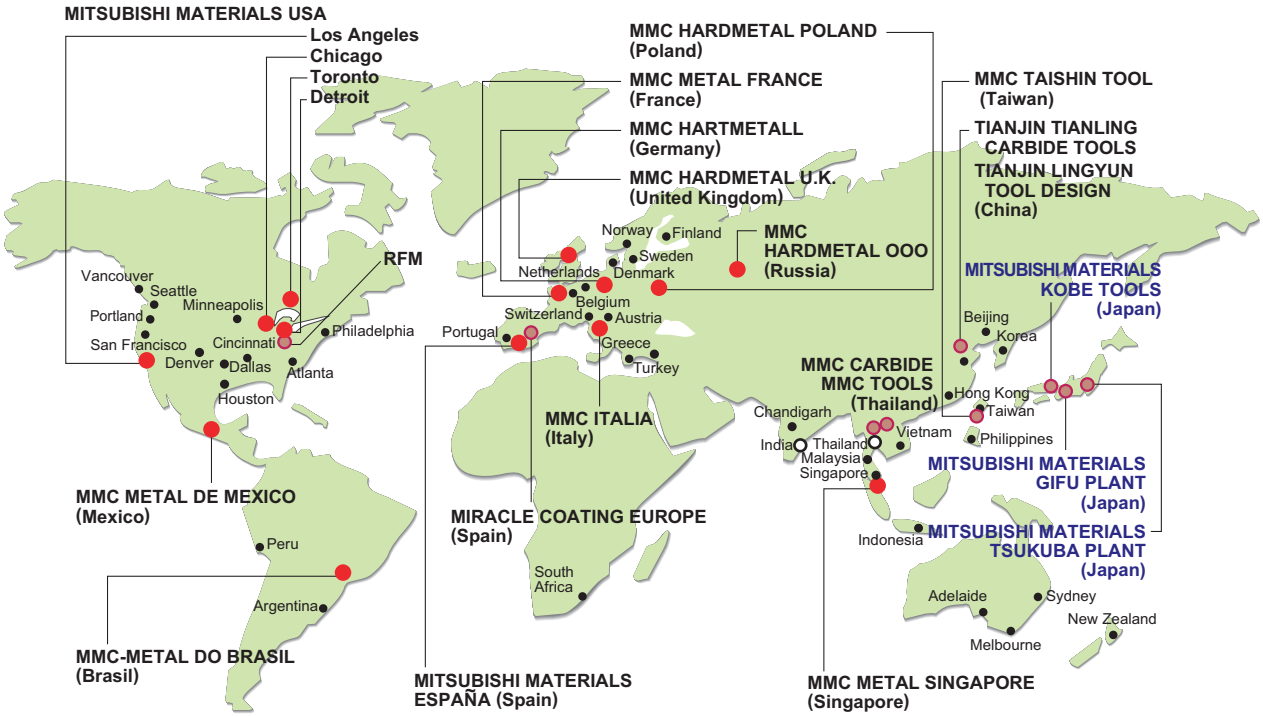

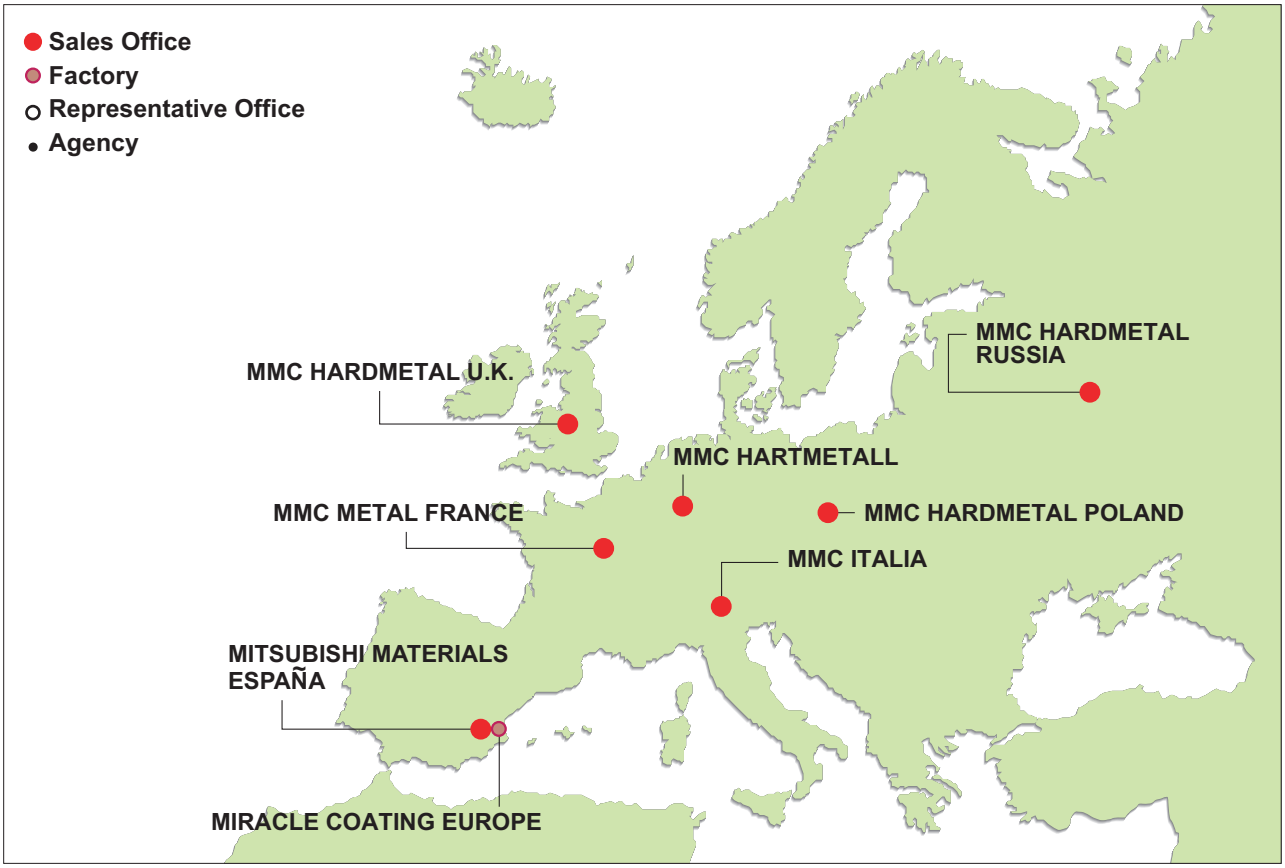

European Sales and Distribution

MMC HARTMETALL GmbH
Comeniusstr. 2, 40670 Meerbusch, Germany
TEL +49-2159-91890 FAX +49-2159-9189-66
email marketing@mmchg.de

MMC HARDMETAL U.K. LTD.
Mitsubishi House, Galena Close,
Amington Heights, Tamworth, B77 4AS, U.K.
TEL +44-1827-312312 FAX +44-1827-312314
email sales@mitsubishicarbide.co.uk

MMC METAL FRANCE s.a.r.l.
6, rue Jacques Monod, 91893 Orsay Cedex, France
TEL +33-1-69-355353 FAX +33-1-69-355350
email mmfsales@mmc-metal-france.fr

MITSUBISHI MATERIALS ESPAÑA, S.A. (S.U.)
Calle Emperador 2, 46136 Museros, Valencia, Spain
TEL +34-96-144-1711 FAX +34-96-144-3786
email mme@mmevalencia.com

MMC ITALIA S.r.l.
V. le delle Industrie 20/5
20020 Arese (Milano), Italia
TEL +39-02-9377031 FAX +39-02-93589093
email info@mmc-italia.it

MMC HARDMETAL POLAND SP. z o.o.
Al. Armii Krajowej 61
50-541 Wroclaw, Poland
TEL +48-71-3351-620 FAX +48-71-3351-621
email sales@mitsubishicarbide.com.pl

MMC HARDMETAL RUSSIA OOO LTD.
ul. Bolschaja Pochtovaja, d.36, str.1 105082 Moscow, Russia
TEL +007-095-72558-85 FAX +007-095-72558-85
email mmc-moscow@lescom.ru

MMC HARTMETALL GmbH
Belgian Liaison Office
33-B6 Boulevard Piecot B-4000 Liege, Belgium
TEL +32-437-00818 FAX +32-423-70562
email balthazar@mmchg.de

EUROPEAN COATING AND TECHNICAL CENTRES
MIRACLE COATING EUROPE S,A.
Calle Nou d'octobre
s/n 46136 Museros Valencia, Spain
TEL +34-96-145-2848 FAX +34-96-144-1338

MITSUBISHI MATERIALS

MITSUBISHI MATERIALS KOBE TOOLS

http://www.mitsubishicarbide.com

2006.3.E(3B)